ANALYSIS AND DESIGN OF REINFORCED EARTH STRUCTURES

By

Patel Bhavin .R.
(06MCL010)

NIRMA UNIVERSITY
INSTITUTE OF TECHNOLOGY

DEPARTMENT OF CIVIL ENGINEERING
Ahmedabad 382481

June 2008

ANALYSIS AND DESIGN OF REINFORCED EARTH STRUCTURES

Major Project

Submitted in partial fulfillment of the requirements

For the degree of

Master of Technology in Civil Engineering
(Computer Aided Structural Analysis & Design)

By

Patel Bhavin .R.
(06MCL010)

Guide
Prof. N.C. Vyas

NIRMA UNIVERSITY
INSTITUTE OF TECHNOLOGY

DEPARTMENT OF CIVIL ENGINEERING
Ahmedabad 382481
June 2008

CERTIFICATE

This is to certify that the Major Project entitled "Analysis & Design of Reinforced Earth Structures" submitted by Mr. Patel Bhavin .R. (06MCL010), towards the partial fulfillment of the requirements for the degree of Master of Technology in Civil Engineering (Computer Aided Structural Analysis and Design) of Nirma University of Science and Technology, Ahmedabad is the record of work carried out by him under my supervision and guidance. In my opinion, the submitted work has reached a level required for being accepted for examination. The results embodied in this major project, to the best of my knowledge, haven't been submitted to any other university or institution for award of any degree or diploma.

Guide,
Professor,
Department of civil engineering,
Institute of Technology
Nirma University,
Ahmedabad.

Dr. P. H. Shah
Professor and Head,
Department of Civil Engineering,
Institute of Technology,
Nirma University,
Ahmedabad.

Director,
Institute of Technology,
Nirma University,
Ahmedabad

____
Examiner

____
Examiner

____
Date of Examination

ACKNOWLEDGEMENT

Any fruitful effort in a new work needs a direction and guiding hands that shows the way. It is proud privilege and pleasure to bring out indebt ness and warm gratitude to respect Prof. N. C. Vyas and Mr. S. G. Pandya, Department of Civil Engineering, Institute of Technology, Nirma University, Ahmedabad for their support during my thesis work.

I would like to express my sincere thanks to Prof. G. N. Patel, Department of Civil Engineering, Nirma University, and Prof. C. H. Shah, Structural Consultant, for their motivational words and continual encouragement throughout the Major Project.

I am also thankful to Dr. P. H. Shah, Head, Department of Civil Engineering, Prof. A. B. Patel, Director, Institute of Technology, Nirma University, for their consent to this project.

I will not abscond this opportunity to thank Civil Engineering Department, Nirma University, and all the departmental members who helped me during this duration.

I would like to give my special thanks to Mr. Malaybhai (Advance Geo-care Technologies) for his support and supplement of the geotextile material for my experimental work.

Finally I would like to thank my classmates for their continuous support and constant encouragement during the project work. I would like to thank each and everyone who directly or indirectly helped me in the accomplishment of the project. The blessings of God and my family members makes the way for completion of major project. I am very much grateful to them.

Finally I am grateful to Institute of Technology, Nirma University, for providing me with an opportunity to work with and carry out a project of this importance.

Patel Bhavin .R.
(06MCL010)

ABSTRACT

Reinforced earth is a composite material which is formed by the association of soil and tension resistant elements in the form of sheet, strips, nets or mats of metal, synthetic fabrics or fibre reinforced plastics and arranged in the soil mass in such a way as to reduce or suppress the tensile strain which might develop under gravity and boundary forces. The largest application of the soil reinforcement is for the construction of the earth structures with steep or vertical sides in lieu of the rigid retaining walls. Besides the technical superiority of the reinforced soil structures over the conventional R.C.C retaining structures, the technique is highly economical and time saving. This merit of reinforced soil enabled it in use in almost all civil engineering structures. The objective of this study is to understand the importance of reinforced earth technique in civil engineering structures.

To study the importance of reinforced earth technique in improving the bearing capacity of soil under footing, an experiment has been done on the bearing capacity of geotextile reinforced soil. Geotextiles used in the experimental study is the woven geotextile. Experiment has been done for two condition i.e. unreinforced condition and reinforced condition. Load-settlement curves are prepared for these two conditions. Using metal strips and geogrid, a reinforced earth footing has been designed to understand the improvement in bearing capacity of soil.

The application of reinforced earth technology in retaining wall construction in place of R.C.C retaining walls results in substantial saving in cost as well as time. Reinforced earth retaining wall is designed using metal strip and geotextile as reinforcement. To study the economy of reinforced earth retaining wall, cost comparative study of reinforced earth retaining wall with R.C.C retaining wall is carried out. Quantity comparison of reinforced earth retaining wall with R.C.C retaining wall is also done.

One of the methods of slope stabilization is the inclusion of the reinforcement in the slope and this can be done economically. Using reinforced earth technology, it is possible to construct very steep slope which lead to increase in usable space compared to unreinforced slope. Reinforced Soil Slope is relatively easy to construct, and have a lower cost relative to reinforced earth retaining walls. Using geogrid a reinforced earth slope is designed.

Reinforced earth bridge abutment is designed using geogrid. Cost comparative study of reinforced earth bridge abutment with R.C.C bridge abutment is done. Quantity comparison of reinforced earth bridge abutment with R.C.C bridge abutment is also done.

The content of major project is divided in to various chapters. Chapter 1 is of a general nature and it serves to introduce the topic. Chapter 2 gives the literature review carried out during work. Chapter 3 presents bearing capacity analysis of reinforced earth foundation. It also includes the experimental study on the bearing capacity of geotextile reinforced soil. Chapter 4 deals with the reinforced earth retaining wall. This chapter also includes the design principles of reinforced earth retaining wall. In chapter 5, design of reinforced earth slopes is presented. Chapter 6 presents the effect of reinforced earth technology on the bridge abutment. Chapter 7 gives the cost comparative study of reinforced earth structures with R.C.C structures. Finally summary, conclusion and future scope of work are given in chapter 8.

CONTENTS

LIST OF FIGURES

LIST OF TABLES

ABBREVIATION NOTATION AND NOMENCLATURE

α	Coefficient of interaction between soil and reinforcement
B	Width of the Foundation
β	Angle of slope
D_f	Depth of Foundation
E_s	Modulus of Elasticity of Soil
FS_B	Factor of Safety against Tie Breaking
f_y	Yield Strength of Reinforcing Material
F_B	Frictional force per unit length of the foundation
FS_P	Factor of Safety against Tie Pull out
H	Height of Reinforced Earth Wall
H’	Modified slope height
H_1	Horizontal loads coming on the abutment
h_e	Depth of influence
ΔH	c/c Spacing between Reinforcement Layers
K	Reinforcement coefficient
K_a	Active Pressure Co-efficient
L	Length of the Reinforcement Strip
L_B	Reinforcement length at the base of the slope
L_e	Effective length of reinforcement
L_{ip}	Anchorage length of the reinforcement
L_T	Reinforcement length at the top of the slope
LDR	Linear Density Ratio
LTDS	Long Term Design Strength of the geogrid
l_1	Lap length of geotextile
μ	Coefficient of base friction
μ_s	Poisson’s Ratio of Soil
N	No. of Reinforcement Layers
P_a	Active force
q	Intensity of surcharge per unit area
q_0	Bearing Capacity for Unreinforced Foundation

q_R	Bearing Capacity for Reinforced Foundation
q_u	Ultimate bearing capacity of soil
Φ	Angle of Friction of Soil
Φ_1	Angle of Friction of Backfill Material
Φ_F	Friction angle at geotextile-soil interface
Φ_f'	Factored soil friction angle
Φ_μ	Angle of Friction between Tie and Soil
RF_{CR}	Reduction factor due to creep
RF_D	Reduction factor due to durability
RF_{ID}	Reduction factor due to installation damage
R_T	Safe design strength of the reinforcement
S_e	Allowable Settlement of Foundations
S_H	Horizontal Spacing of Reinforcement Ties
S_V	Vertical Spacing of Reinforcement Ties
σ_a	Active Pressure at any Depth z
$\sigma_{a(1)}$	Active pressure due to soil only
$\sigma_{a(2)}$	Active pressure due to surcharge
σ_G	Allowable strength of geotextile
σ_v	Effective Vertical Pressure
T_N	Force in the Reinforcement Ties
T_{max}	Total force in the geogrid
T_{ult}	Ultimate tensile strength of the reinforcement
t	Thickness of Reinforcement Ties
V_1	Vertical loads coming on the abutment
w	Width of Reinforcement Ties
γ	Density of the Soil
γ_1	Density of Backfill Material
z	Depth of geotextile from base of footing

1. INTRODUCTION

1.1 GENERAL

Soil reinforcement has been in vogue in crude form since ancient times and is practiced even in the animal kingdom. Some of the exiting historical monuments bear testimony to the use of earth reinforcement technique over the centuries gone by Jones (1978). No systematic or rational study of soil reinforcement had, however, been made till a French engineer, Henri Vidal published his investigation on soil reinforcement in 1966 and started the use of the term “Reinforced Earth”. The trust reposed by him in this technique has been amply demonstrated by hundreds of civil engineering structures built using reinforced earth technique over the past few decades which performing satisfactorily. No new material or technique has aroused so much interest and awareness amongst civil engineers in recent times as soil reinforcement has done. The apparently simple mechanism of reinforced earth and the economy in cost and time has made it an instant success with research workers and field engineers alike.

1.2 HISTORY AND DEVELOPMENT OF THE REINFORCED EARTH STRUCTURES

The first reinforced earth structure built, was the retaining wall of Pragnieres, France in 1965. Soon after that, in 1968-69 a large project including 10 retaining walls on unstable slopes near Nice, France gave the impulse for large research programs and technological developments. This important effort explains the worldwide commercial success of the technique.

Three events marked the technological development of reinforced earth. First is the choice of galvanized steel for strips and facing, after unsuccessful tentative experiments with polyester-coated fiberglass, stainless steel and aluminum. The second event was the development in

1971 of a typical cruciform panel for the facing in replacement of the original U-shaped metallic facing elements. This type of prefabricated element offers the possibility of architectural finishes and curved facings. It is now representative worldwide of reinforced earth and its development. In 1975, the reinforced earth company patented the ribbed strip. This new technological improvement issued directly from research on the soil reinforcement frictional interaction. Owing to the restrained dilantancy effect, the presence of the ribs on a reinforcement leads to a much higher apparent friction coefficient.

First Project in India: Recently, a project using reinforced earth technology was implemented in Jammu where the retaining walls were constructed for an arterial expressway corridor project. The client was PWD (R&B) of Jammu; contractor was U.P. state bridge corporation Ltd. and consultant, C.E.S (P) Ltd. New Delhi. The total length of the wall to be constructed was 325 m and height of wall varies form 2.5 m to 8 m. The experience with this work has indicated that the application of reinforced earth technology in place of R.C.C retaining walls results in substantial saving in cost as well as time.

1.3 REINFORCED EARTH TECHNIQUE

Reinforced earth is a composite material which is formed by the association of frictional soil and tension resistant elements in the form of sheet, strips, nets or mats of metal, synthetic fabrics or fibre reinforced plastics and arranged in the soil mass in such a way as to reduce or suppress the tensile strain which might develop under gravity and boundary forces. It is well known that most granular soils are strong in compression and shear but weak in tension. The performance of such soils can be substantially improved by introducing reinforcing elements in the direction of tensile strains in the same way as in reinforced concrete. Reinforcing elements can be installed in soils by two methods:

- One by placing them in horizontal layers during earth filling operations at pre-specified spacing.
- Another by inserting the reinforcement elements into an existing soil mass as per a pre-determined pattern.

The effectiveness of a reinforcing element embedded in soil is governed by the following factors:

- The capacity of the element to withstand tensile stresses i.e. its tensile strength.
- The amount of extension exhibited by the element under tensile stresses.
- The shearing resistance between the reinforcement and the surrounding soil i.e. the maximum stress that can be resisted by the soil-reinforcement interface before the reinforcement slips away from the soil.

The advantages of the reinforced earth technique are well recognized:

- Reliability: The durability of the materials and reliability of the reinforced earth structures in many geotechnical situations and risk prone areas which includes static loads, vibrations, explosions, impact, high amplitude earthquakes, extremely low temperatures and effect of waves and storms in marine environments is very good.
- Economy: The simplicity and speed of construction from the use of completely prefabricated facing and reinforcing elements, constitutes one of the most obvious advantages. Standardized design methods, optimum use of materials and flexible foundations make it cost effective.
- Adaptability: Reinforced earth solves the problems posed by difficult situations like restricted space, unstable slopes, serious subsidence etc.

- Environmental consideration: Clean and rapid construction because of no in-situ concreting, no unsightly scaffolding and no heavy machinery makes it superior from environmental consideration.
- Aesthetics of the structure and architectural finish of the facing: the adaptability of the panel technique enables the designer to best fit the shape of the structure to the environment and to select an appropriate finish.

1.3.1 Basic Components of the Reinforced Earth Structure

There are three basic components of any reinforced earth structure (as shown in fig. 1.1). They are:

1. Soil or fill matrix.
2. Reinforcement.
3. A facing panel.

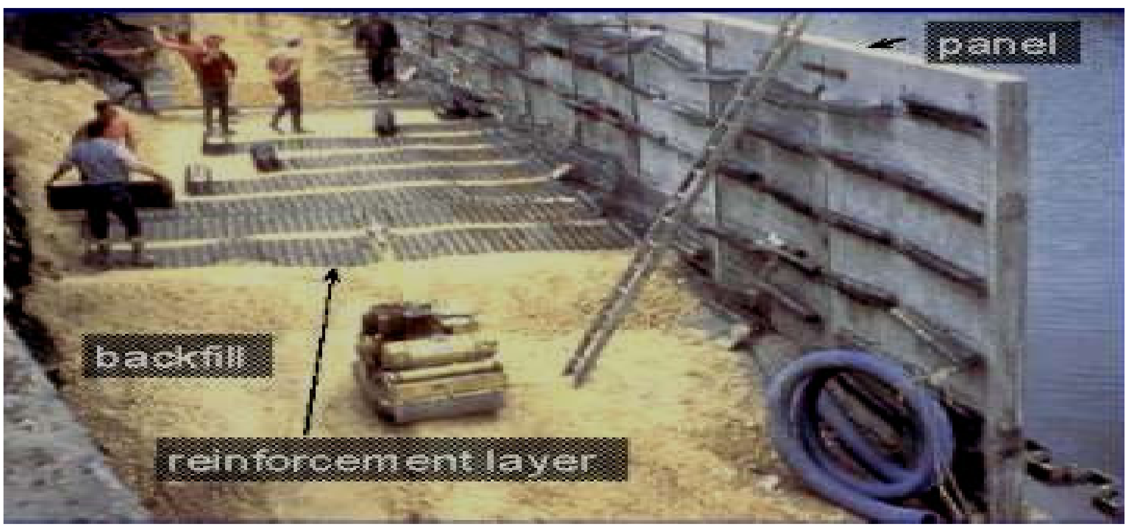

Fig. 1.1 Components of the Reinforced Earth Structures

In addition, other materials are required to cover associated elements such as the foundation, drainage, connecting elements, leveling pad and capping units. In a reinforced earth structure, soil constitutes most of the bulk. It becomes important to select a suitable type and material considering both durability and economy of the structure.

1. Soil or fill matrix:

   The choice of soil is determined from the following considerations:

   - Type of the structure.
   - Long-term stability of completed structure.
   - Short term or construction phase stability.
   - Physiochemical properties of the materials.
   - Economy.

   Cohesionless soil compacted to densities that result in volumetric expansion during shear, is ideally suited for use in reinforced earth structures while the cohesive soils are not suitable for reinforced earth structures. The stability of a reinforced earth structure depends on the adequate development of friction bond between soil and reinforcement.

2. Reinforcement:

   The most common types of reinforcement used in reinforced earth structures are strips, bars, sheets or grids (see fig. 1.2). They are just placed or in the case of sheets and grids spread on the horizontal soil surface by rolling out. On the other hand, for reinforcing existing soil formations they are driven or drill-place-grout elements. They are in the shape of rigid bars, rods or pipes and are referred to as soil nails.

   Reinforcement strips are linear elements, usually made of galvanized steel having thickness of about 5 to 15 mm, width of 50 to 100 mm and length of several meters. Sheet reinforcements are made of woven or non-woven geotextiles and have the appearance of a thick cloth. Grids are mesh-like reinforcing elements having apertures of 50 to 200 mm. They may be made of steel wires, such as welded mesh or of polymeric material in which case they are referred to as geogrids. Geotextiles and geogrids are examples of geosynthetics.

Steel bars, rods or tubes used, have diameters of 20 to 70 mm. They are either placed on the soil or when used as soil nails, they are driven into the soil by percussion hammering, rotary action, vibrations or firing. They can also be grouted after insertion in predrilled holes of diameter 100-150 mm.

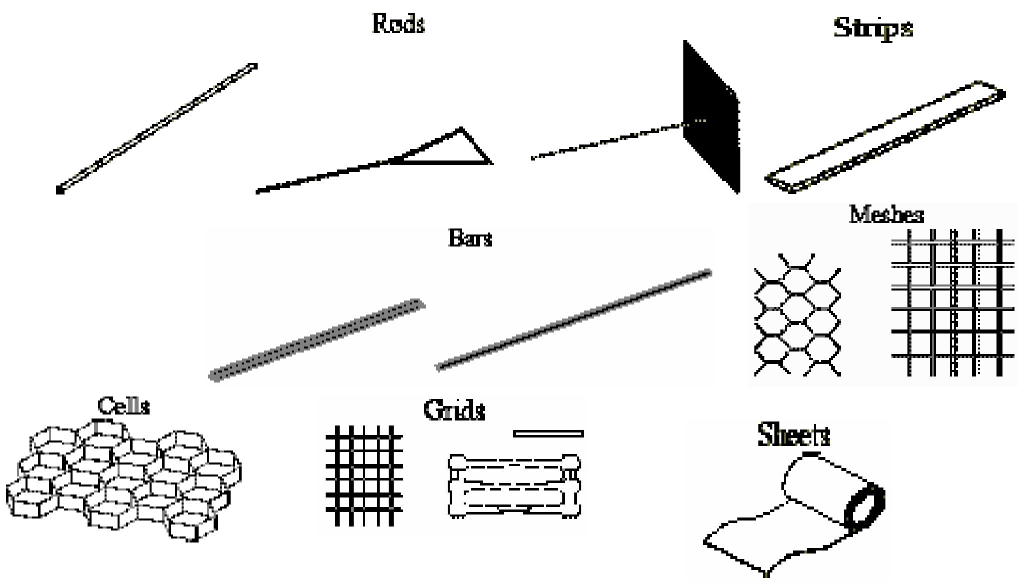

Fig. 1.2 Various Types of Reinforcement

3. Facing elements:

   For vertical structures a facing is required. Purpose of facing element is to retain the soil between the layers of the reinforcements in the immediate vicinity of the facing and to provide a suitable architectural treatment to the structure.

   Facing made up of either metal units or precast concrete panels, are commonly used because of their ease in handling and assembling.

   Metal facing elements are manufactured from mild or galvanized steel or aluminum and have the same properties as the reinforcing strips and generally 333 mm high. Metal facing is semi-elliptical in c/s and there is a continuous horizontal joint along one edge. Holes are provided for bolting the facing elements to one another and to the reinforcing strips. This type of facing was the first to be used in reinforced earth construction. The standard facing elements are straight measure up to 10 m long and weight 115 kg. Shorter facing elements are available for connections at the extremities and special units are supplied for corners.

Concrete panel facing: the precast concrete panels are cruciform-shaped, weigh about one ton and are separated by a substantial joint. Vertical dowels set in to the panels assist in the assembly and ensure the interaction between panels which makes the entire facing behave as flexible unit.

1.3.2 Mechanism of the Reinforced Earth Technique

To understand the mechanism by which reinforcement improves the performance of soil, take the laboratory experiment of a tank filled with sand. A tank ABCD as shown in figure 1.3(a) is filled with dry sand. When side AB of the container is to be removed, the vertical face of the sand does not remain stable and the soil mass rearranges itself as a sloping surface as shown in the figure 1.3(b). Now repeat the above experiment by using geotextile material as reinforcement in the soil mass. The geotextile is a flexible material that resembles a strong or thick sheet of cloth. This material is placed in horizontal layers when the sand is filled in the tank and it is folded at the ends as shown in the figure 1.3(c). After filling the tank to the top, when side AB is to be removed the vertical face of the sand does not collapse.

Some bulging of the soil may be observed but the face remains vertical and stable. This is so because, when the soil particles in the failure zone begin to move, the geotextile reinforcement prevents their movement. The reason why this happens becomes apparent when one notes that a significant length of each layer of the geotextile reinforcement is buried in soil that does not move-see figure 1.3(d). When the soil mass in the unstable zone begins to move, it tries to pull the geotextile reinforcement along with it. However, the movement of the geotextile is prevented by the soil of the stable zone, which firmly grips the reinforcement, not allowing it to be pulled out. This ensures that the soil grains in the failure zone are unable to move, since they can not slip past the reinforcement. Hence the entire soil in which the reinforcement is buried remains stable. The influence of the reinforcement is to hold the soil mass together as if some 'apparent confining pressure' is acting on the periphery of the soil mass or as if some 'apparent cohesion' or 'apparent tensile strength' has developed within the soil mass.

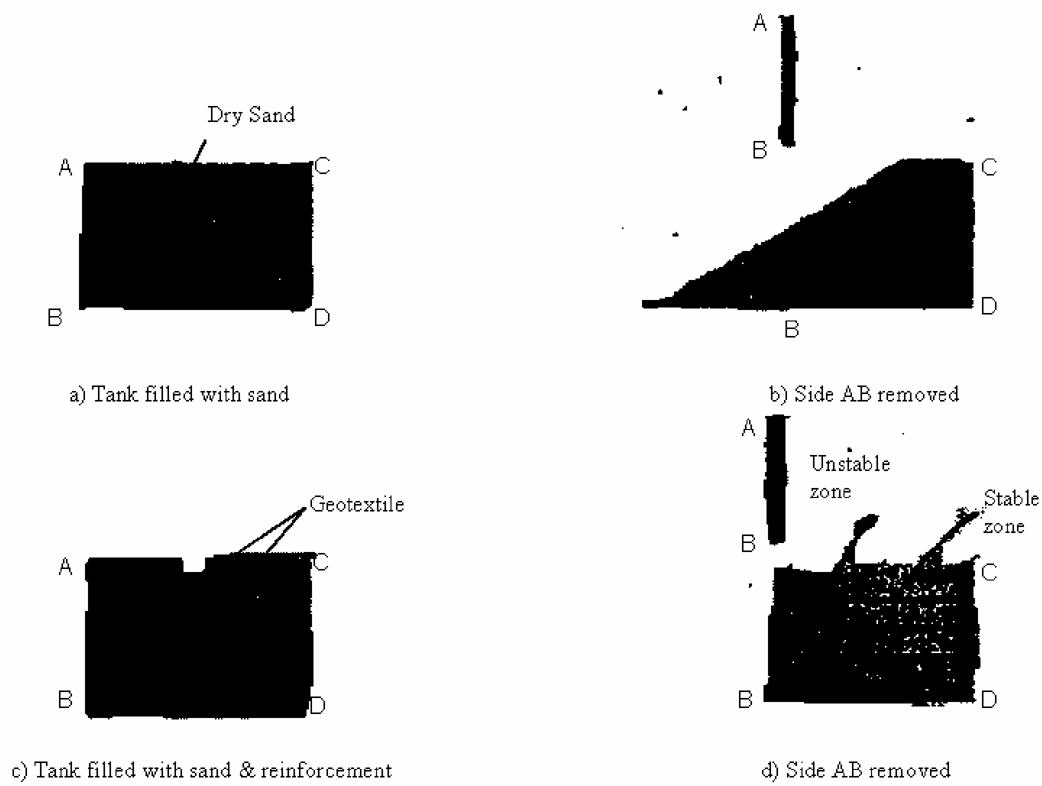

Fig. 1.3 Mechanism of the Reinforced Earth Technique

1.3.3 Applications of the Reinforced Earth Technique

The largest application of the soil reinforcement is for the construction of the earth structures with steep or vertical sides in lieu of the rigid retaining walls. The variety and range of application of reinforced soil technique is unlimited. Jones (1985) identified several field applications, viz. retaining walls, abutments, quay walls, embankments, dams, hill roads, housing, foundations, railways, industry, pipe works, waterway structures and underground structures. Some of the field applications are illustrated in the following figures (Figure-1.4, a to k).

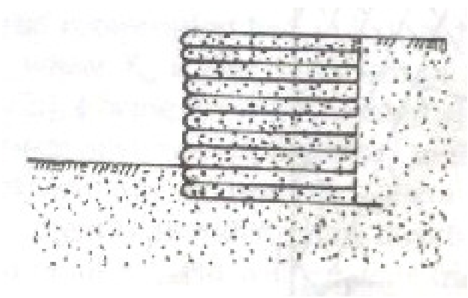

a) For providing sharp differences of level between two horizontal platforms.

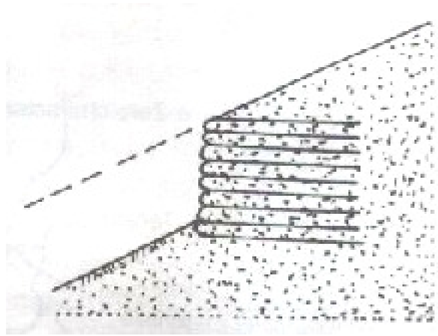

b) For supporting and also being a boundary to a large inclined embankment.

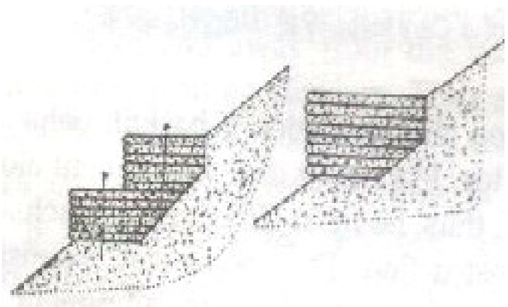

c) For providing horizontal platforms on sloping ground.

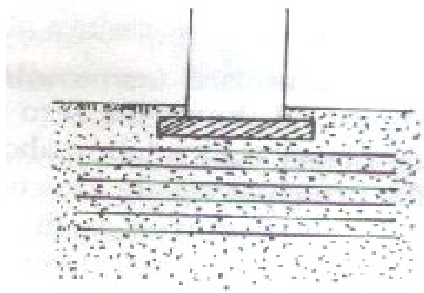

d) As a foundation slab.

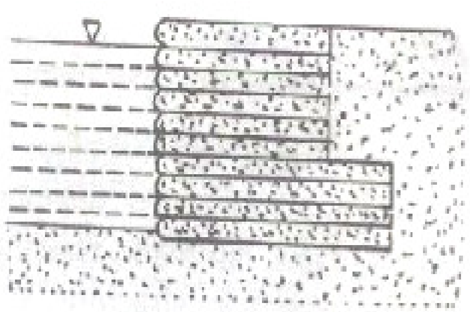

e) As quay walls.

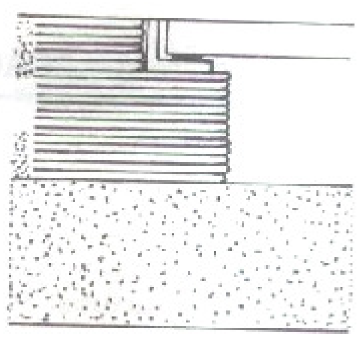

f) As bridge abutment.

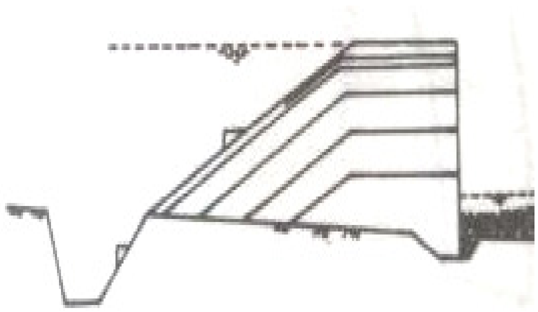

g) As reinforced earth dam.

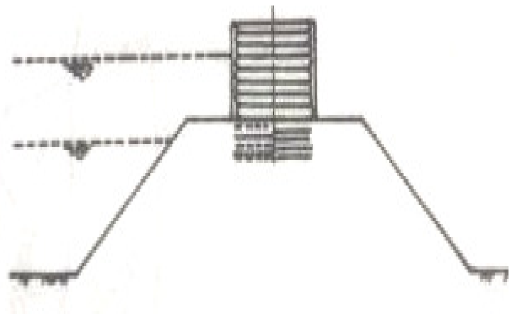

h) For raising height of existing dam.

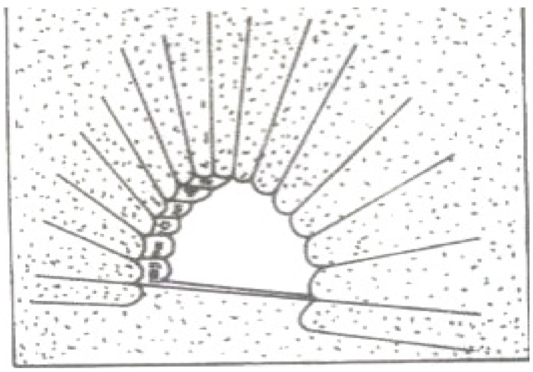

i) As reinforced earth arch.

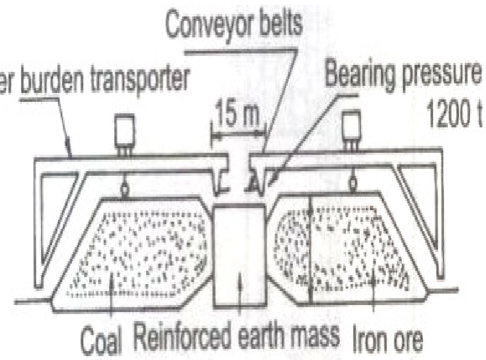

j) For bulk storage & handling.

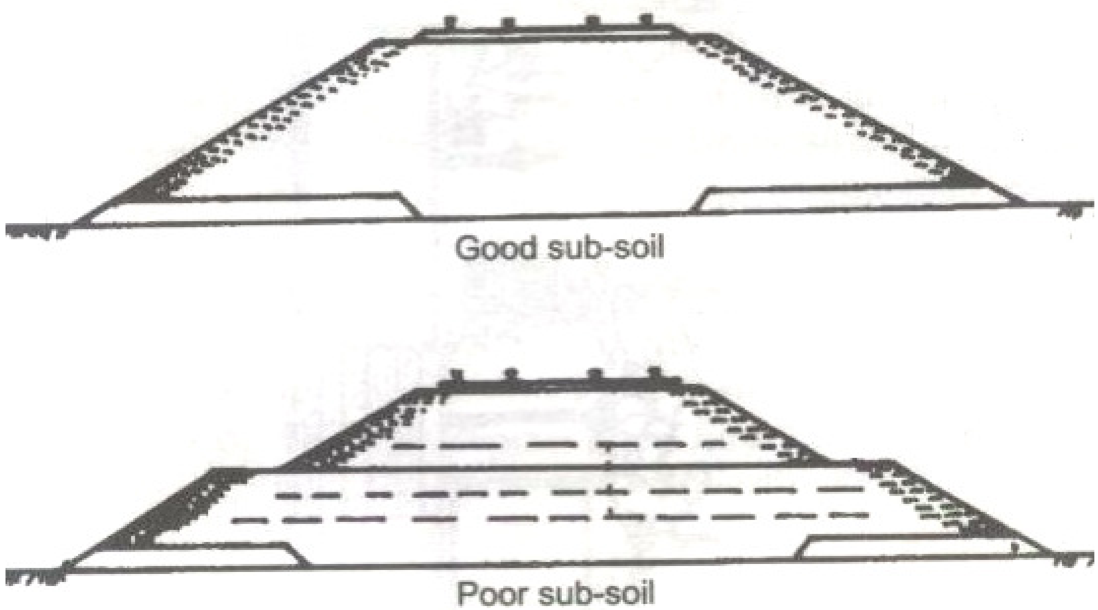

k) As railways embankment.

Fig. 1.4 Uses of the Reinforced Earth Technique

1.3.3.1 Applications in India

There are numerous applications using reinforced soil in India, both for reinforced soil construction for reinforced soil wall, high embankments and stabilization of foundation for construction on soft soil. A few of the applications in India are discussed below:

- Approach embankment for palacole Road Over Bridge, A.P state:
  In this project the reinforcement used was the geogrid and non-woven geotextile for foundation improvement. Geocell mattresses are also used.
- Embankment of narsapur-aswaropet road, A.P state:
  In this project the geogrid reinforced soil wall is provided with reinforced soil foundation.
- Bridge cross river vasistha at chinchinuada, A.P state:
  The foundation improvement is done with use of geocell mattress using geogrids.
- Road Over Bridge at chandrapur, Maharastra:
  The approaches to R.O.B are provided with geogrid reinforced soil retaining wall. The foundation is provided using layers of bi-oriented geogrids.
- Road Over Bridge at babupeth, Maharastra:
  The one end approach to R.O.B is provided with geogrid reinforced soil retaining wall. The foundation is provided using layers of bi-oriented geogrids.

Significant progress has been achieved in reinforced soil construction with proper selection of materials.

1.3.4 Construction of the Reinforced Earth Structure

The construction of reinforced earth structures is essentially an earthwork construction process but it is important to recognize that any structure, which depends on the efficiency of the placing and compacting of the soil elements, is vulnerable to poor construction procedures. There are number of general considerations regarding the construction process, which apply to all reinforced earth retaining structures, regardless of the facing form or type. Following are the steps of the construction of the Reinforced Earth retaining structure (as shown in figure 1.5):

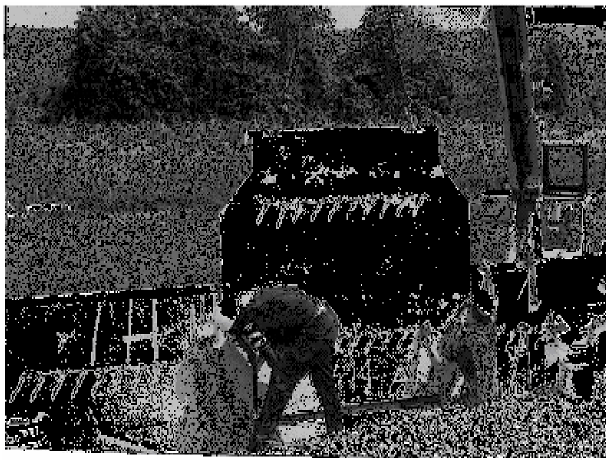

a) Erection of the Facing Panel

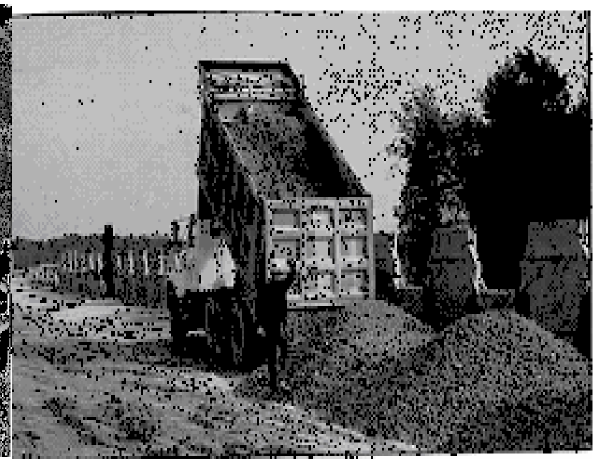

b) Placement of Material

c) Spreading of the Backfill

d) Placement of the Reinforcement

e) Compaction of the Backfill

Fig. 1.5 Construction of the Reinforced Earth Structure

1. Storage and handling of the material

   It is important that the reinforcement material is stored correctly so that physical or chemical damage is avoided. Geosynthetic materials are produced from different polymers that all have their own characteristics and the requirements of the manufacturer with regard to the treatment of these materials on the construction site should be adhered to at all times.

2. Drainage

   If the foundation of the structure is not free draining, a longitudinal drainage trench or a porous or open jointed drainage pipe of suitable size or a geocomposite drain shall be placed at the base of the structure to collect water and bring it to the site drainage system.

   A drainage layer placed behind the facing and linked in to the foundation drainage can prevent the build up of internal water pressures which could have a damaging effect on the face, particularly when the actual reinforced fill material is not free-draining.

3. Preparation

   Where hard facing units are used, a leveling pad, stepped like the foundation platform, should be provided at the foundation beneath the facing. This leveling pad is not a structural foundation but it provides a firm platform on which the facing units can be installed to the correct line and level. It should be formed by thin layer of mass concrete or can be a gravel platform if the facing units are relatively broad.

4. Placement of the facing

   It is very important that all facing types are retained in the correct position during the construction process. This may involve the use of props, wedges, temporary supporting structures to ensure that the facing is stable at all stages of the filling process. For larger panel facings this can involve significant temporary works whereas for modular block systems it is simply a question of restricting the number of blocks that are placed between reinforcement layers. The alignment of the facing should be checked continuously during the raising of the structure to ensure that the tolerances required to satisfy the aesthetics are achieved. In general the flexibility of the construction process enables any gradual divergence from the specified alignment to be corrected provided that it is recognized at an early stage of its development.

5. Placement of the reinforcement

   The reinforcement should be placed on an even surface and connected to the facing in accordance by the specified method. It is critical that the reinforcement is placed so that any physical slack is removed, as this is a potential area for problems either during or after construction. Any connection between the main reinforcement layer and the facing should be pulled tight and held until some fill has been placed on to the reinforcement.

6. Placement of the fill

   One of the advantages of reinforced earth construction is that the fill is placed and compacted in layers as this is necessary for the reinforcement to be positioned correctly. Care should be taken to avoid any construction equipment traveling directly on the reinforcement without soil cover and the size of the compaction equipment should be limited in the area close to the face. This is necessary to guard against damage of the reinforcement or the facing and also to prevent the face being pushed out of line by excessive compaction effort. Accepted limitations are that any compaction equipment of more than 1500kg should be kept at least 1m away from the face and that the compaction of the 1m strip should be carried out with lighter equipment adopting thinner compaction layers if necessary. For ease of construction the designed positions of the reinforcement layers should be multiples of the compacted layer thickness.

1.3.5 Economic Aspects of Reinforced Earth Construction

Besides the technical superiority of the geogrid reinforced soil structures over the conventional R.C.C retaining wall, the technique is highly economical. Typical cost comparison of R.C.C retaining wall with Reinforced Earth retaining wall is given in the Table 1.1 below (Som Sarkar et al.):

Table 1.1 Cost Comparison of R.C.C Retaining wall with Reinforced Earth structures

Total Height of the Structure (m)	Cost of Geogrid Reinforced Soil Slope (Rs./m)	Cost of Geogrid Reinforced Soil Wall (Rs./m)	Cost of R.C.C Retaining Wall (Rs./m)
5	8,015	12,860	23,390
6	12,400	16,960	43,650
7	13,490	23,300	59,750
8	15,750	27,700	76,585
9	18,535	34,100	Not Adopted
10	22,260	46,030	Not Adopted

Form above study, it can be concluded that earth reinforcement technique has following advantages and these merits of reinforced soil enabled it in use in almost all civil engineering structures:

- A simple composite material, quick and easy to make.
- A flexible material, able to withstand important deformations without damage.
- A heavy material both from the technical and architectural points of view.
- An economical material.

1.4 OBJECTIVE OF THE STUDY

The objective of present study is to understand the importance of reinforced earth technique in civil engineering structures. The main objectives of the study are listed below:

a) To study the importance of reinforced earth technique in improving the bearing capacity of soil under footing.
b) To analyze and design the reinforced earth retaining wall.
c) To study the effect of reinforced earth on the stability of the slopes.
d) To study the use of reinforced earth technique for bridge abutment.

1.5 SCOPE OF THE WORK

The major scope for work includes:

1) Detailed study on the importance of reinforced earth technique for improving the bearing capacity of soil under footing.
2) Analysis and design of reinforced earth retaining wall using MS-Excel worksheets and programming in C/C++.
3) Detailed stability analysis of reinforced earth slopes using MS-Excel worksheets and programming in C/C++.
4) Detailed study of reinforced earth bridge abutment using MS-Excel worksheets and programming in C/C++.
5) Experimental study on bearing capacity of geotextile reinforced soil.

6) Cost comparative study of reinforced earth retaining wall with conventional retaining wall and also for R.C.C bridge abutment with reinforced earth bridge abutment.

1.6 ORGANISATION OF THE MAJOR PROJECT

The contents of major project are divided in to various chapters as follows.

Chapter 1 deals with the introduction of the reinforced earth structures and objectives and scope of the study.

Category wise literature survey is included in Chapter 2. It includes the various papers related to the reinforced earth structures.

Chapter 3 deals with bearing capacity analysis of reinforced earth foundation using metal strip and geogrid as reinforcement. It also includes the experimental study on the bearing capacity of geotextile-reinforced soil.

Chapter 4 gives the design of the reinforced earth retaining wall using metal strip and geotextile as reinforcement. Design of the reinforced earth retaining wall is carried out using MS-Excel worksheet.

Chapter 5 gives the design of the reinforced earth slope using geogrid as reinforcement. Computer program in c for design of the reinforced earth slope is also prepared.

Chapter 6 provides the design of the reinforced earth bridge abutment using geogrid as reinforcement. Design of the reinforced earth bridge abutment is carried out using MS-Excel worksheet and computer program in c.

Chapter 7 gives the cost comparative study of the reinforced earth retaining wall with R.C.C cantilever retaining wall, considering the variation of the height of the wall. It also includes the cost comparative study of reinforced earth bridge abutment with R.C.C bridge abutment.

Chapter 8 gives the conclusions of the study and future scope of work.

2. LITERATURE SURVEY

2.1 GENERAL

The worldwide acceptance and utilization of reinforced earth makes it one of the most significant civil engineering developments of the last three decades. Although the reinforced earth technology came in to existence in the year 1963 from the pioneer work of French engineer Henri Vidal, the first significant projects were constructed in 1967. The use of reinforced earth retaining walls then spread very rapidly and by the early 1970s many significant projects were in place in several countries. Subsequently, civil engineers have accepted reinforced earth technology widely and its uses have been diversified. This chapter will give the idea of amount of work done till now in this particular area.

Literature survey is carried out to be familiar with the amount of work done in the area throughout the world. The survey gives idea about the extent of work to be carried out during project. It helps in framing the scope of work. It also helps in deciding the line of action of work. It generates the clear vision of the work and gives the overall scenario of it. During this survey many new things, concept and idea will emerge which improve the clarity of the topic.

2.2 LITERATURE REVIEW

Initially literature related to the topic is searched out and collected through various sources e.g. local libraries, websites related to the topic etc. papers from ASCE journals, science direct, IGC, proceedings etc are collected and complied. Books exclusively related to the topic are referred. Many websites has been searched for getting the information of the work done in the related area worldwide.

2.2.1 Technical Papers

Abstracts of some of the papers, which are very much related to the topic searched during literature survey, are given below.

Gandhi G.N. et al. [8] French engineer Henry Vidal first introduced the intrusion of reinforcement in the soil at a particular level to increase the bearing capacity of soil. The work presented in this paper is a study to examine the improvement in bearing capacity of cohesion less soil reinforced with fiberglass woven polystrone geotextile the laboratory testing work was performed in three stages 1) determination of physical properties of soil 2) determination of shear strength parameter of soil geotextile system 3) determination of bearing capacity of unreinforced soil and soil reinforced with geotextile. They have performed test by placing the geotextile at various depths below the bottom of the footing. Load settlement curves are also prepared for all cases.

Murthy V.S. et al. [9] this paper deals with the series of triaxial compression tests on dry sands reinforced with various types and forms of reinforcement to understand the effect of types and forms of reinforcement on the shear strength improvement. The influence of the tensile strength and the modulus of the reinforcing material on the strength improvement of sand in triaxial compression is studied. Authors have observed that the reinforcement significantly improves the cohesive strength of dry sand, whereas the frictional strength is not varied much. The strength increase was generally proportional to the amount of reinforcement in planar kind of reinforcement. They have concluded that among the planar and cellular reinforcement, cellular reinforcement has been found to be more effective in improving the strength.

Dey B. [4] this paper deals with the calculation of bearing capacity of reinforced foundation bed, the contribution of soil and that of layers of reinforcement have been evaluated and added together to get the final result. Authors have considered the effect of various reinforcement parameters on the bearing capacity of reinforced foundation bed. Authors have concluded that the methodology adopted for prediction of bearing capacity of strip footing on reinforced foundation bed seems to be promising and may be tried for other cases to assess its reliability.

Jenner C.G. [1] the publication of design codes of practice and standards for reinforced earth in recent years has generated a growth in the use of these techniques. Reinforced earth has become more generally accepted as an efficient alternative to the traditional types of construction. The options that are available in terms of facing selection are now quite large and the effects of the facing type on the construction process can be significant. This paper gives the number of facing types with the relevant construction details and some case studies of the actual projects.

Sudhakar M. and Rajesh V. [2] there is several methods available to design any reinforced earth wall. The method discussed in this paper combines the concept of reinforced earth and anchored earth. Also an important design parameter of reinforced earth structures is the friction mobilized between the soil and reinforcing elements, i.e. the pullout friction. The most commonly adopted method to identify this friction is a special test setup, i.e. the pullout test. Compared to the results of the pullout test, the direct shear test gives much smaller value. Hence it is important to get the value of pull out test using standard test method specified in BS 8006.

Kempton G. et al. [3] BS 8006 is a code of practice, used widely throughout the world, for designing reinforced earth structures including walls. While being comprehensive in its coverage of reinforced earth techniques at the time of preparation, more recent developments in applications and assessment procedures have highlighted areas where the code is limited. This paper highlights four of these limitations. Detailed supplemental information is provided on good practice during the construction of these systems. Recent technological advances covered in the paper are a new method of assessing creep behavior using retained strength, seismic activity and the design of segmental retaining walls.

Arijit Bhakat [7] the design of a reinforced earth abutment is presented. It includes both external and internal stability analysis. Procedure of computing the tension in reinforcement due to vertical and horizontal loads transferred from bridge deck has been discussed separately. In the end an illustrative example is added for fluid understanding. An attempt has been made to give procedure for designing true reinforced earth bridge abutments.

Loke K.H. [5] Main components of reinforced earth structures like slopes and walls are the reinforcing elements, backfill soils and the facing systems. The behavior of these individual components or in combination or interaction with each other needs to be fully understood in order to properly design reinforced earth structures. Particular attention is needed when dealing with poor draining soils, as they become a commonly used construction backfill material for economic reasons. This is because by their inherent nature, the soils trap moisture and possess low resistance to tensile stresses. This paper looks at polymeric materials as the reinforcing elements interacting with poor draining soils. This being the case of interest due to the fact that most potential failures are somewhat related to unreinforced poor draining soils or a wrong combination with reinforcing elements. As these two materials interact together, the properties and behavior of these materials must be evaluated either independently or as a combination of composite component. The evaluation of the properties and behavior of materials and subsequently the correct design approach of the compatible materials formed the basis for mitigation of slope failures. Several large scale testing of reinforced earth structures are used to substantiate ways of slope failures mitigation. Some case studies are also presented to show the identified system works and as a support to research findings. Another interesting area presented is the validity of the accelerated testing on polymer reinforcement as compared to real time testing in the attempt to predict the performance of long-term behavior of the reinforcing elements. In addition to all efforts made to mitigate slope failures based on the evaluation of reinforced earth structure components, a preventive measuring system against slope failure is also presented through the use of state-of-art innovation, the instrumented geosynthetic reinforcement.

Purkayastha R.D. et al. [6] Use of geosynthetics in natural or man-made slopes, both in cutting and filling, is commonly used now a day to increase stability. But till now, no widely accepted theory is available to estimate the factor of safety (FOS) of reinforced slopes. In this study, bishop's method has been extended for the case of reinforced slopes in filling. The horizontal and vertical inter-slice forces were essentially considered and the effect of reinforcement is incorporated. Geogrid reinforcement is considered to exert a tensile force in slice and considering lateral earth pressure theory and shear strength theory, a new equation has been developed for estimating the factor of safety of reinforced slope. Factor of safety of geosynthetic reinforced slope for different slope angles, soil parameters, reinforcement strength and spacing have been computed and plotted as design chart.

2.3 SUMMARY

In this chapter, review of relevant literature is carried out. The review of literature includes concepts of Reinforced earth technique, bearing capacity analysis of reinforced earth footing and behavior of reinforced earth structures.

3. BEARING CAPACITY ANALYSIS

3.1 GENERAL

Ground improvement using reinforcement is one of the fastest and latest growing techniques in the field of geotechnical engineering. One of the areas where the reinforced earth technique could be used very effectively is in the improvement of bearing capacity. Reinforced earth foundation bed is a soil foundation containing horizontally embedded geosynthetics/thin flat metal strips, ties or grids. Model studies by several investigators have clearly indicated the advantages and possibilities for improvement in the bearing capacity and stiffness of the load-settlement behavior by reinforcing the foundation soil.

Due to the decreasing availability of good construction sites, foundation engineer frequently comes across the problem of putting structures on low bearing capacity deposits. The traditional options to such situation are:

- Pile foundation placed through the weak soil.
- Excavation and replacement with suitable soil.
- Stabilizing with injected additives.
- Pre-consolidation.
- Applying the techniques for densification of soil.

All these methods have a certain degree of applicability, but all suffer from being either expensive or time consuming.

The newly emerging method is to remove the existing weak soil up to a shallow depth and replace it by the granular soil reinforced with horizontal layers of high tensile strength reinforcement. The main advantages of reinforced soil technique are in increasing the bearing capacity, reducing the differential settlement and the net settlements of the foundation, easy construction and obviating the need for deep foundations.

3.2 ADVANTAGES OF THE REINFORCED SOIL BED

Apart from economic advantages, the reinforced soil bed opens up possibilities of founding civil engineering structures on soil conditions that is not suitable. Further, the type of foundation itself can be changed by using this technique. Allowable bearing pressure of soil strata depends on the ultimate bearing capacity as well as the permissible settlement of the footing. To restrict the settlement within permissible limits often necessitates reducing the bearing pressure on the subsoil. If the footings are widely spaced it is possible to reduce the bearing pressure to some extent by increasing the size of the footing. However, if the footings are closely spaced and the soil is very weak, then the size of the footing required may be so large that it necessitates a combined footing or a raft foundation. Isolated spread footings are invariably more economical than the combined footings or raft foundation. Introduction of a layer of reinforced soil between the footing and the weak subsoil can increase the bearing capacity substantially, thus obviating the necessity of a combined footing or a raft foundation. Thus increasing the allowable soil pressure can economically change the type of foundation itself.

3.3 MECHANISM OF THE REINFORCED SOIL BED

The reinforced soil technique concept is essentially based on the mobilization of the interfacial shearing resistance between the soil and reinforcement, which in turn restrains the lateral deformation of the soil.

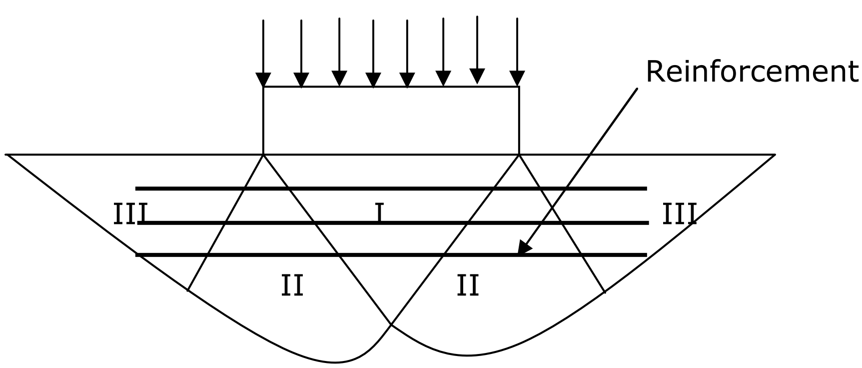

Fig. 3.1 Interaction of reinforcement with failure wedges

As shown in the figure 3.1, soil below a footing consists of three zones i.e. zone I is an active rankine zone which moves vertically downwards and displaces the radial prandtl zone (II) in a lateral direction and passive rankine zone III in an upward direction. In case of reinforced soil the above possible failure surface is intercepted by the horizontally placed reinforcements. Therefore, for the lateral movement of the zone II to occur, soil in that zone has to overcome the frictional resistance at the soil-reinforcement interface. Thus the effect of the reinforcement is to check the lateral flow of soil beneath the footing by introducing lateral confinement.

3.4 MODES OF FAILURE OF REINFORCED SOIL BED

Many investigators have studied experimentally the behavior of footings resting on reinforced soil and helped in understanding the behavior of reinforced soil foundations. The common findings of these investigators were that by preparing a suitable reinforced soil bed, the ultimate bearing capacity of footing can be increased by 3 to 4 times and the settlement/tilt can be brought down to 30% of the same footing resting on unreinforced soil bed.

Binquet and lee (1975) have identified three possible modes of failures for the reinforced soil for a footing.
Failures modes are:

1. Shear failure of soil above the upper most layer of the reinforcement: the mode of failure is possible if depth to the topmost layer of reinforcement is sufficiently large (figure 3.2 (a)).

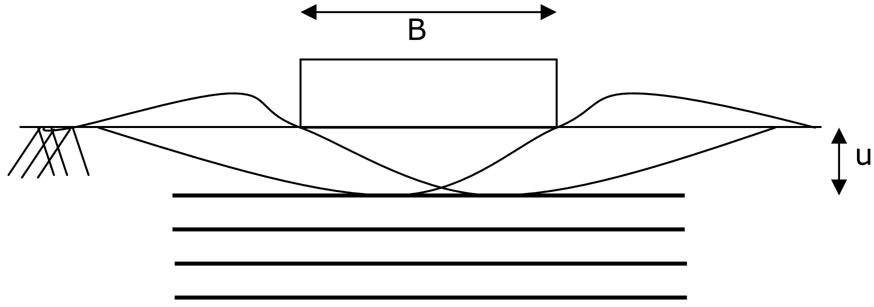

Fig. 3.2 (a) u/B > 2/3; shear above reinforcement

2. Reinforcement pull-out failure: this type of failure occurs for reinforcement placed at shallow depths beneath the footing with insufficient anchorage (figure 3.2 (b)).

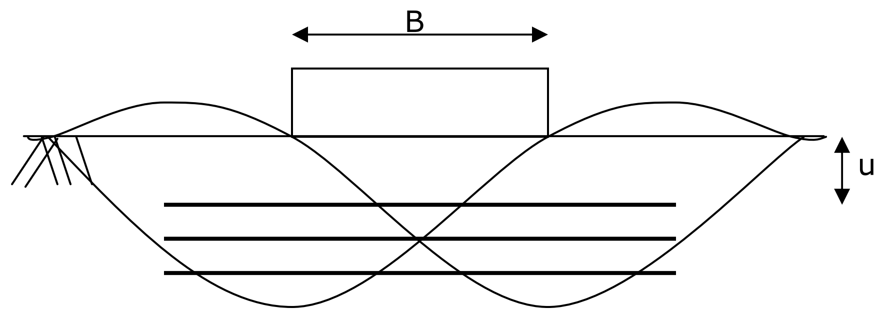

Fig. 3.2 (b) u/B < 2/3; ties pull out

3. Reinforcement tension failure: this type of failure occurs in the case of long and shallow reinforcement for which the frictional pull-out resistance is more than the tensile strength (figure 3.2 (c)).

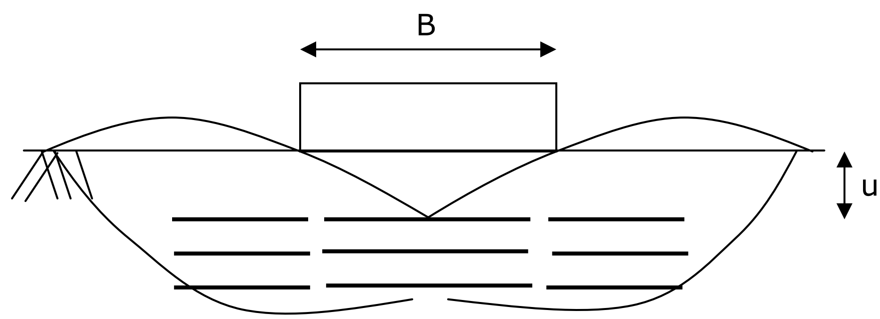

Fig. 3.2 (c) u/B < 2/3; upper ties break

Fig. 3.2 Failure Modes of the Reinforced Earth Footing

3.5 PATTERN OF REINFORCEMENT BENEATH FOOTING

Ideal pattern of reinforcement for footing should be in accordance with the directions of principle tensile strain. In order to satisfy this condition, the reinforcement should lie along the lines as shown in figure 3.3 below, starting with horizontal reinforcement below the footing and becoming progressively more vertical at some distance away on either side. It is impractical to provide a continuous system of reinforcement. The practical feasibility of providing reinforcement is illustrated by sridharan in 1990 as shown in figure 3.3 below.

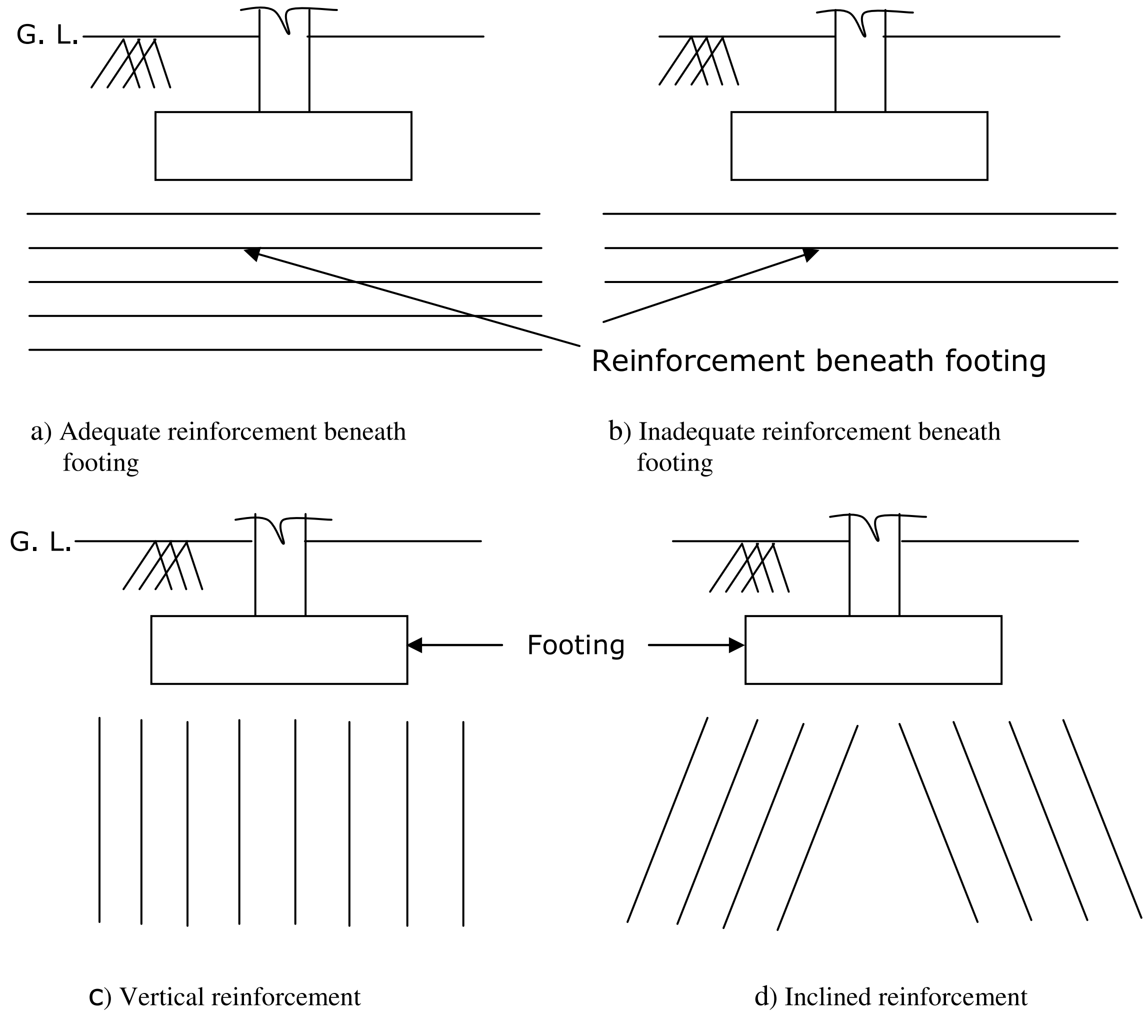

Fig. 3.3 Pattern of Reinforcement beneath footing

3.6 DESIGN PROCEDURE OF REINFORCED EARTH FOOTING

The procedure for designing shallow foundations for limiting settlement condition (i.e. for allowable bearing capacity) with layers of geogrid as reinforcement is still in the research and development stages. However, the problem of allowable bearing capacity of shallow foundations resting on granular soil reinforced with metallic strips was studied in detail by binquet and lee (1975), who proposed the rational design method as described below.

3.6.1 Force in the reinforcement ties

$$T_N = \frac{1}{N}\left[q_0\left(\frac{q_R}{q_0} - 1\right)\left(A_1B - A_2\Delta H\right)\right] \qquad \ldots (3.1)$$

Where,

N = number of reinforcement layers.

q_0 = bearing capacity of soil for unreinforced foundation.

q_R = bearing capacity of soil for reinforced foundation.

B = width of the foundation.

ΔH = c/c spacing between reinforcement layers.

A_1 and A_2 are the factors, which depends on the ratio of z/B.

3.6.2 Factor of safety of ties against breaking and pullout

Once the tie forces that develop in each layer as the result of the foundation load are determined from equation above, an engineer must determine whether the ties at any depth will fail either by breaking or by pullout.

The factor of safety against tie breaking at any depth z below the foundation can be calculated as:

$$FS_B = \frac{wtnf_y}{T_N} \qquad \ldots (3.2)$$

Where,

FS_B = factor of safety against tie breaking.

w = width of a single tie.

t = thickness of each tie.

n = number of ties per unit length of the foundation.

fy = yield or breaking strength of the tie material.

The term wn may be defined as the Linear Density Ratio (LDR), so

$$FS_B = \left[\frac{tf_y}{T_N}\right](LDR) \qquad \ldots (3.3)$$

The resistance against the tie being pulled out derives form the frictional resistance between the soil and the ties at any depth.

The frictional force per unit length of the foundation resisting tie pullout at any depth z is,

$$F_B = 2\tan\phi_u(LDR)\left[A_3 B q_0\left(\frac{q_R}{q_0}\right) + \gamma(L_0 - X_0)(z + D_f)\right] \qquad \text{... (3.4)}$$

Where,

γ = density of the soil.

D_f = depth of the foundation.

ϕ_u = angle of friction between tie and soil.

L_0, $A_3$and X_0 are the factors, which depends on the ratio of z/B.

The factor of safety against tie pullout, FS_P is,

$$FS_P = \frac{F_B}{T_N} \qquad \text{... (3.5)}$$

3.6.3 Design procedure of metal strip reinforced earth foundation

Following is a step-by-step procedure for the design of a strip foundation supported by granular soil reinforced by metallic strips:

1. Obtain the total load to be supported per unit length of the foundation. Also obtain the quantities:
   - Angle of friction of soil (Φ).
   - Angle of friction between soil and tie (Φu).
   - Factor of safety against bearing capacity failure.
   - Factor of safety against tie breaking (FS_B).
   - Factor of safety against tie pullout (FS_P).
   - Breaking strength of reinforcement ties (fy).
   - Density of soil (γ).
   - Modulus of elasticity of soil (Es).
   - Poisson's ratio of soil (μ_s).

- Allowable settlement of foundations (Se).
- Depth of foundation (D_f).

2. Assume a width of foundation (B) and also depth of footing (d) & no. of layers of ties (N). The value of d should be less than two-third of B. also, the distance from the bottom of the foundation to the lowest layer of the reinforcement should be about 2B or less. Calculate ΔH.

3. Assume a value of Linear Density Ratio (LDR).

4. For width B, determine the ultimate bearing capacity (q_u) for unreinforced soil.

$$q_u = \gamma D_f Nq + \frac{1}{2}\gamma B N_\gamma \qquad \text{... (3.6)}$$

Determine $q_{all\,(1)}$ based on the B.C. criteria:

$$q_{all\,(1)} = \frac{qu}{\text{F.O.S against B.C failure}} \qquad \text{... (3.7)}$$

5. Calculate the allowable load $q_{all\,(2)}$ based on the permissible settlement (S_e) assuming that the soil is not reinforced:

$$S_e = \frac{Bq_{all(2)}}{Es}\left(1-\mu_s{}^2\right)\alpha_r \qquad \text{... (3.8)}$$

For L/B = ∞, the value of α_r may be taken as 2 (form IS:1904-1978).

$$q_{all(2)} = \frac{EsSe}{B\left(1-\mu_s{}^2\right)\alpha_r} \qquad \text{... (3.9)}$$

6. Determine the lower of the two values of q_{all} obtained from step 4 and 5. The lower value of q_{all} equals q_0.

7. Calculate the magnitude of B.C. q_R for the foundation supported by reinforced earth:

$$q_R = \frac{\text{load on foundation per unit length}}{B} \qquad \text{... (3.10)}$$

8. Calculate the tie force T_N in each layer of reinforcement by following equation:

$$T_N = \frac{1}{N}\left[q_0\left(\frac{q_R}{q_0} - 1\right)(A_1B - A_2\Delta H)\right] \qquad \text{... (3.11)}$$

9. Calculate the frictional resistance of ties for each layer per unit length of foundation (F_B). For each layer, determine whether F_B / T_N P FS_P. If $F_B/T_N < FS_P$, the length of the reinforcing strips for a layer may be increased. That will increase the value of F_B and thus FS_P.

10. Using $t = \frac{FS_B \times T_N}{(LDR)f_y}$ this equation, obtain the tie thickness for each layer. Some allowance should be made for the corrosion effect of the reinforcements during the life of the structure.

11. The minimum length of the ties in each layer should equal 2^*L_0. Where L_0 is the factor which depend on the ratio of z/B.

12. If the design is unsatisfactory, repeat the steps 2-11.

3.7 DESIGN EXAMPLE

3.7.1 Design of Strip foundation with metal strip reinforcement ties

Data

Foundation Carry a Load = 1800 kN/m

Properties of Granular Soil:

Density of Soil (γ) = 17.3 kN/m^3

Angle of Repose (Φ) = 35^o

Modulus of Elasticity (E_s) = 30000 kN/m^2

Poisson's Ratio (μ_s) = 0.35

Properties of Galvanized Steel Strip Reinforcement Ties:

Grade of Steel (f_y) = 250000 kN/m^2

Angle of Friction (Φ_μ) = 28^o

Factor of Safety for Breaking = 3

Factor of Safety for Pullout = 2.5

Depth of Foundation (D_f) = 1 m

F.O.S for B.C. failure = 3

Permissible Settlement (S_e) = 25 mm

Desired Life of Structure = 50 yrs.

Design

Assume,

Width of Foundation (B) = 1 m

Depth from the bottom of the foundation

to the first reinforcing layer (d) = 0.5 m

c/c spacing between layers (ΔH) = 0.5 m

No. of Layers of Ties (N) = 5

Linear Density Ratio (LDR) = 65 %

If Width of reinforcing strips (w) = 75 mm

Then wn = LDR or

No. of Ties in one layer = $n = \frac{LDR}{w} = 8.667$ per m

Hence each layer will contain 8.67 ≈ 9 strips per m length of the foundation.

Determination of q_0

Bearing Capacity (q_0), for an Unreinforced Foundation,

$$q_u = \gamma D_f Nq + \frac{1}{2}\gamma B N_\gamma$$

From Bearing Capacity Factor table for $\Phi = 35^o$ (IS: 6403-1981)

N_q = 33.3

N_γ = 48.03

So, q_u = 991.5495 kN/m^2

From bearing capacity criteria,

$$q_{all(1)} = \frac{q_u}{FS against B.C. failure} = 330.51 \text{ kN/m}^2$$

From settlement criteria,

For $q_{all(2)}$,

$$q_{all(2)} = \frac{EsSe}{B(1-\mu_s{}^2)\alpha_r} = 427.35 \text{ kN/m}^2.$$

For L/B = ∞, Value of α_r = 2 (IS: 1904-1978)

As $q_{all(1)} < q_{all(2)}$,

So, $q_0 = q_{all(1)}$ = 330.51 kN/m^2.

Determination of q_R

Actual bearing capacity of soil,

$$q_R = \frac{\text{Load on foundation per unit length}}{B}$$

So, q_R = 1800 kN/m^2.

Calculation of Tie Force (T_N)

$$T_N = \frac{1}{N}\left[q_0\left(\frac{q_R}{q_0} - 1\right)(A_1 B - A_2 \Delta H)\right]$$

T_N= (1/5)x(330.51x((1800/330.51)-1)x(0.32x1-0.08x0.5)) = 82.29 kN/m *

No. of reinforcement layers (N) = 5

B.C of unreinforced soil (q_0) = 330.5165 kN/m^2

B.C. of reinforced soil (q_R) = 1800 kN/m^2

Width of the Foundation (B) = 1 m

c/c spacing between layers (ΔH)= 0.5 m

Distance from bottom of footing to respective ties = z

Let z will be varying at depth of = 0.5 m

A_1 and A_2 will be taken from graph as shown fig. 3.4 below.

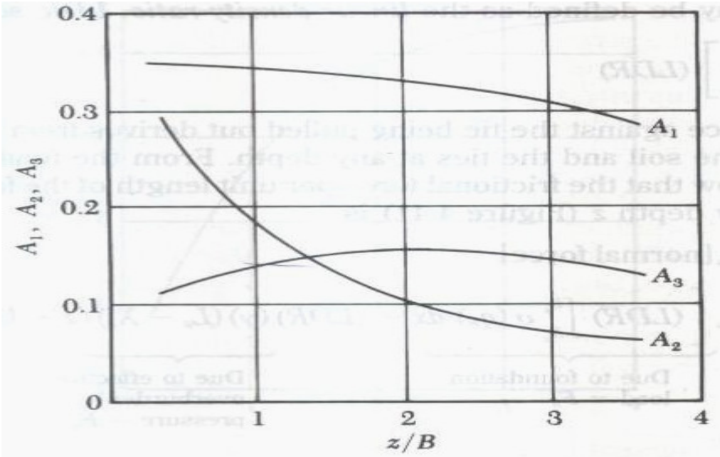

Fig. 3.4 Variation of A_1, A_2 and A_3 with z/B

Table 3.1 Value of A_1 and A_2

Layer No.	A_1	A_2	z	z/B
1	0.35	0.25	0.5	0.5
2	0.34	0.18	1	1
3	0.34	0.13	1.5	1.5
4	0.33	0.1	2	2
5	0.32	0.08	2.5	2.5

Let,

$\left(\frac{q_0}{N}\right)\left(\frac{q_R}{q_0}-1\right)$ = 293.90 kN/m^2.

The tie forces for each layer are given in the table 3.2 below.

Table 3.2 Calculation of T_N

Layer No.	$\left(\frac{q_0}{N}\right)\left(\frac{q_R}{q_0}-1\right)$	z (m)	A_1B	$A_2\Delta H$	A_1B-$A_2\Delta H$	T_N (kN/m)
1	293.8967	0.5	0.35	0.125	0.225	66.13
2	293.8967	1	0.34	0.09	0.25	73.47
3	293.8967	1.5	0.34	0.065	0.275	80.82
4	293.8967	2	0.33	0.05	0.28	82.29
5	293.8967	2.5	0.32	0.04	0.28	82.29

Calculation of Tie Resistance due to Friction (F_B)

$$F_B = 2\tan\phi_u (LDR)\left[A_3 B q_0\left(\frac{q_R}{q_0}\right) + \gamma(L_0 - X_0)(z + D_f)\right]$$

F_B = 2x0.5317x0.65x(0.15x1x330.51x(1800/330.51)+(17.3x(4.2-1.65)x(2.5+1))) = 293.36 kN/m *

Angle of Friction (Φ_μ) = 28^o

So, tanΦ_u = 0.5317

LDR =65 % = 0.65

2*tanΦu*LDR = 0.691

A_3 will be taken from graph as shown fig. 3.4 above.

L_0 and X_0 will be taken from graph as shown fig. 3.5 below.

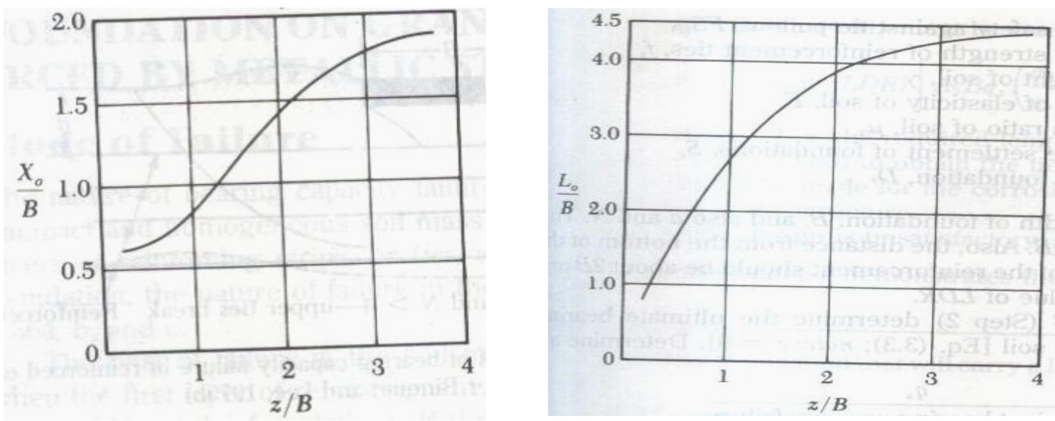

Fig. 3.5 Variation of X_0/B and L_0/B with z/B

Table 3.3 Values of L_0 and X_0

Layer No.	z	z/B	A_3	$A_3Bq_0\left(\frac{q_R}{q_0}\right)$	L_0 (m)	X_0 (m)
1	0.5	0.5	0.125	225	1.55	0.55
2	1	1	0.14	252	2.6	0.8
3	1.5	1.5	0.15	270	3.4	1.1
4	2	2	0.15	270	3.85	1.4
5	2.5	2.5	0.15	270	4.2	1.65

Above table 3.3 gives the value of L_0 and X_0.

Density of the Soil (γ) = 17.3 kN/m^3

Depth of the Foundation (D_f) = 1 m

Table 3.4 gives the tie resistance due to friction.

Table 3.4 Calculation of F_B

Layer No.	L_0-X_0	z+D_f	$\gamma(L_0-X_0)(z+D_f)$	$2x\tan\Phi_u xLDR$	$A_3Bq_0\left(\frac{q_R}{q_0}\right)$	F_B (kN/m)
1	1	1.5	25.95	0.691	225	173.46
2	1.8	2	62.28	0.691	252	217.24
3	2.3	2.5	99.48	0.691	270	255.39
4	2.45	3	127.16	0.691	270	274.52
5	2.55	3.5	154.40	0.691	270	293.36

Factor of Safety against Tie Pullout (FOS_P):

Table 3.5 Calculation of FS_P

Layer No.	F_B (kN/m)	T_N (kN/m)	$FS_P = F_B/T_N$
1	173.46	66.13	2.62
2	217.24	73.47	2.96
3	255.39	80.82	3.16
4	274.52	82.29	3.34
5	293.36	82.29	3.56

Calculation of Tie Thickness to Resist Tie Breaking (t)

See table 3.6,

$$FS_B = \left[\frac{tf_y}{T_N}\right](LDR) \Longrightarrow t = \frac{FS_B * T_N}{(LDR)f_y}$$

Grade of the Steel (f_y) = 250000 kN/m^2

Linear Density Ratio (LDR) = 0.65

F.O.S against B.C.failure (FS_B) = 3

t = 1.84615E-05 x T_N

Table 3.6 Calculation of Thickness of Tie

Layer No.	Thickness of Metal Ties (t)		
1	0.00122	m = 1.22	mm
2	0.00136	m = 1.36	mm
3	0.00149	m = 1.49	mm
4	0.00152	m = 1.52	mm
5	0.00152	m = 1.52	mm

Thus in each layer ties with a thickness of 1.6mm will be sufficient. However, if galvanized steel is used, the rate of corrosion is at 0.025mm/yr, so t should be 1.6+ (0.025x50) = 2.85mm.

Calculation of Minimum Length of the Ties

The minimum length of ties in each layer = $2xL_0$

Table 3.7 Calculation of Length of Tie

Layer No.	Minimum length of the Tie	
1	3.1	m
2	5.2	m
3	6.8	m
4	7.7	m
5	8.4	m

Design Parameters

Max. Tie Length = 8.4 m
Tie Width = 75 mm
Tie Thickness = 2.85 mm
Vertical Spacing= 0.5 m
Horizontal Spacing= 35 mm

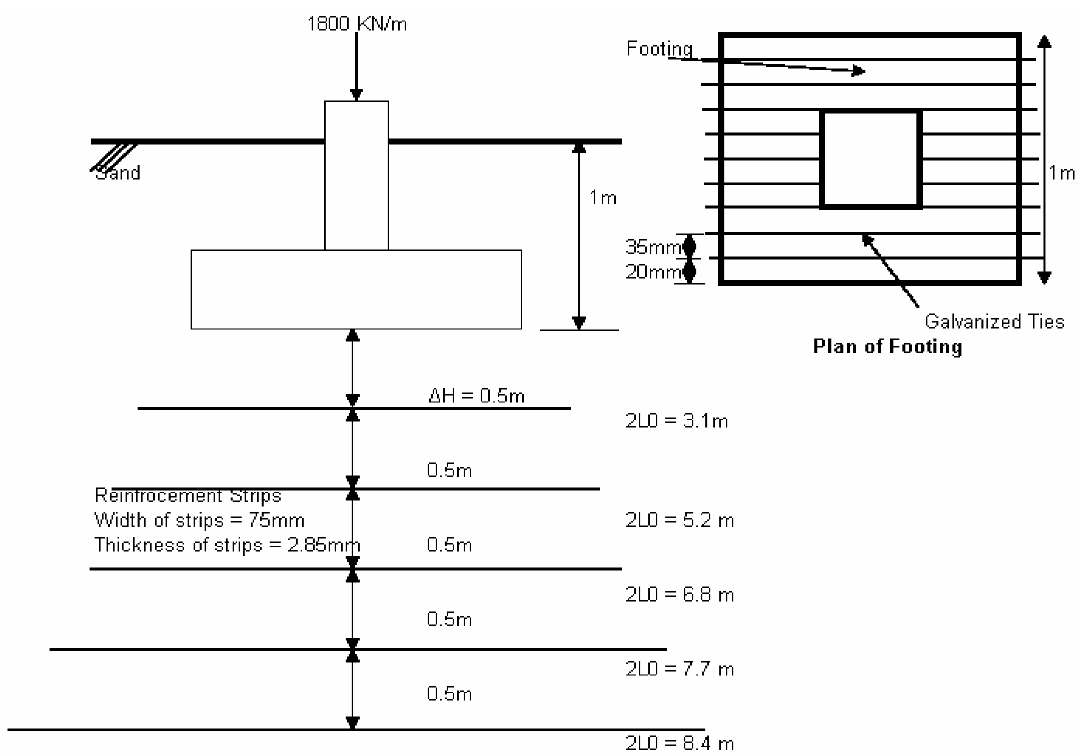

Fig. 3.6 Details of metal strip reinforced earth footing

3.7.2 Design of the Reinforced Earth Footing with Geogrid

Data

Foundation Carry a Load = 800 kN

Properties of the Granular Soil:

Density of Soil (γ) = 16 kN/m^3

Angle of Repose (Φ) = 35 ^{o}

Modulus of Elasticity (E_s) = 25000 kN/m^2

Poisson's Ratio (μ_s) = 0.25

Depth of Foundation (D_f) = 1 m

Permissible Settlement (S_e) = 40 mm

Safe Bearing Capacity of the Soil (q_0)

Bearing Capacity for Unreinforced Condition,

From bearing capacity criteria,

$$q_{all(1)} = \frac{q_u}{FSagainstB.C.failure}$$

Factor of Safety for B.C. failure = 2.5

$$q_u = \gamma D_f Nq + \frac{1}{2}\gamma B N_\gamma$$

From Bearing Capacity Factor table for Φ = 35^o (IS: 6403-1981)

N_q = 33.3

N_γ = 48.03

Width of the Footing (B) = 1 m

So, q_u = 917.04 kN/m^2

So, $q_{all(1)}$ = 366.816 kN/m^2

From settlement criteria,

For $q_{all(2)}$,

$$q_{all(2)} = \frac{EsSe}{B(1-\mu_s{}^2)\alpha_r}$$

For Square Footing α_r = 1 (IS: 1904-1978)

So, $q_{all(2)}$ = 1066.666667 kN/m^2

So, q_0 = $q_{all(1)}$ = 366.816 kN/m^2

Total Load to be Carried by the Footing = 800 kN

Area of the Square Footing (A) = 1 m^2

So, Load carried by the Soil = 366.816 kN

Load to be carried by Reinforcement = 800-366.8 = 433.184 kN

Select Geogrid Reinforcement,

Size of Geogrid = 2x2 m (A_R = 4 m^2)

Vertical Spacing of Layers = 0.2 m

Depth of first layer from footing level (ΔH) = 0.2 m

For Geogrid,

Angle of Friction (Φ_μ) = 1

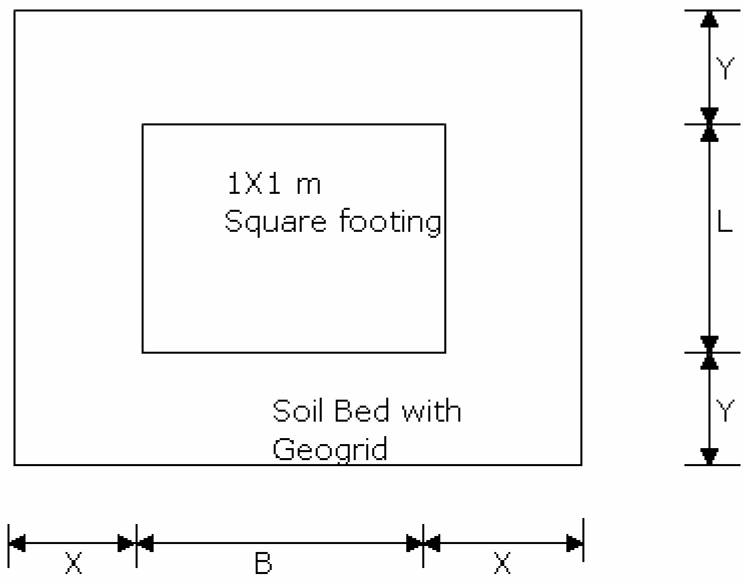

Fig. 3.7 Plan of footing

In above Figure 3.7,

X = 0.5 m

Y = 0.5 m

Provide 3 Layers of Geogrid Reinforcement.

Table 3.8 gives the values of T_{fp} and T_{fz}.

Table 3.8 Calculation of T_{fp} and T_{fz}

Depth	z/B	s (mm)	ε (%)	$\Phi_{\mu m}$	M	P (kN)	T_{fp}(kN)	T_{fz}(kN)
z (m)								
0.2	0.2	36	4.5	35	0.251	800	140.6	40.33
0.4	0.4	32	2	35	0.335	659.4	154.7	47.05
0.6	0.6	28	1.16667	20.4	0.393	504.7	73.77	28.56

The settlement s at any depth z,

s = Sx[1-0.5x(z/B)]

S = 40mm given

Sliding Strain ε = s/ (4xz)

Mobilized Angle of interfacial Friction ($\Phi_{\mu m}$),

$\Phi_{\mu m}$ = 0.5xΦμxε ≤ Φ_{μ}

The Normal force factor (M) for each layer will be taken form, IS: 1904-1978 for Value of z/B with X/B or Y/L.

P = Tension mobilized due to External Load.

$$P = P_t - \sum_{j=1}^{j=i-1} M_j \times P_j \times \tan\phi_{\mu mj} \times k$$

P_t = Total load on the footing = 800 kN

For Geogrid k = 1

P = 800-(0.251x800xtan35x1) = 659.4 kN

T_{fp} = Tension mobilized in reinforcement due to applied load.

$$T_{fpi} = M_i \times P_i \times \tan\phi_{\mu mi} \times k$$

T_{fp} = 0.251x800xtan35x1 = 140.6 kN

T_{fz} = Tension mobilized due to surcharge of the soil.

$$T_{fzi} = (A_R - A) \times \gamma \times (D_f + z_i) \times \tan\phi_\mu i \times k$$

T_{fz} = (4-1)x16x(1+0.2)xtan35x1 = 40.33 kN

Design of Reinforcement

It is seen from above table 3.8 that, the max. Tension mobilized is 202 kN in the second layer.

(T = 154.7+47.05 = 202kN)

This load is distributed along the perimeter of the footing.

Load per m length = 202/4 = 50.5 kN/m

Provide a geogrid of strength greater than 51 kN/m.

Alternatively weld mesh can also provided.

c/s area of weld mesh = $\frac{202\text{x}1000\text{x}100}{1300000}$ = 15.5 m^2

(Allowable stress in MS bars = 1300000 kN/m^2)

If 4mm dia. bar are provided, total no. of bars required, n = (15.5)/(πx0.4/4) = 123 bars

No. of bars required on each side of footing = 123/4 = 31

Spacing of grid = 100/31 = 33.3 cm

Therefore Provide lateral & longitudinal spacing of grid = 3x3 cm (fig. 3.8)

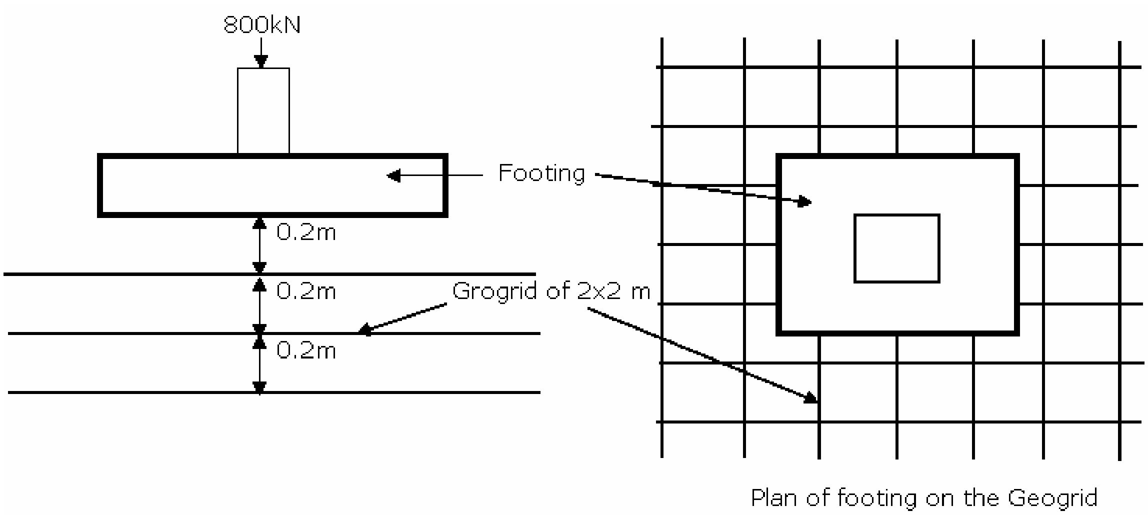

Fig. 3.8 Details of geogrid reinforced earth footing

3.8 EXPERIMENTAL STUDY ON THE BEARING CAPACITY OF GEOTEXTILE REINFORCED SOIL

3.8.1 General

The intrusion of reinforcement in the soil at a particular level to increase the bearing capacity of soil is first introduced by French engineer Henry Vidal in 1960. The work presented here is a study to examine the improvement in bearing capacity of soil0 reinforced with woven geotextile. The laboratory testing work is performed in two stages:

1. Determination of physical properties of soil such as dry density of soil, specific gravity, grain size distribution etc.
2. Determination of bearing capacity of unreinforced soil and soil reinforced with the geotextile.

Test is performed by placing the geotextile at the depth of 2cm and 4cm below the bottom of the footing.

3.8.2 Materials used for the study

The study is conducted on the cohesive soil brought from P. G. Center, Nirma University. Various tests such as specific gravity, moisture content, grain size distribution and direct shear test are performed on representative soil samples. The soil is found to be sandy clay. The properties of soil are as below:

Field density of soil (γ) = 18.01 kN/m^3

Dry density of soil (γ_d) = 16.91 kN/m^3

Moisture content of soil = 12%

Cohesion of soil (c) = 0.48 kg/cm^2

Angle of internal friction = 37^0

Specific gravity of soil (G) = 2.57

The geotextile used in this study is woven tape geotextile distributed by Advance Geocare Technologies Ltd. various properties of the geotextile are given below:

Weight of geotextile = 214 gm (ASTM D5261)

Grab tensile = 1.40 kN (ASTM D4632)

Grab elongation = 15% (ASTM D4632)

Trapezoid tear = 0.533 kN (ASTM D4533)

Puncture resistance = 0.533 kN (ASTM D4833)

Permittivity = 0.05 sec^{-1} (ASTM D4491)

A.O.S = 0.425 mm (ASTM D4751)

U. V. resistance = 70% per 500 hrs. (ASTM D4355)

3.8.3 Experimental Work

The laboratory experimental work is performed in two stages:

1. Determination of physical properties of soil such as dry density of soil, specific gravity, grain size distribution etc.
2. Determination of bearing capacity of unreinforced soil and soil reinforced with the geotextile.

Various equipments used in this study are as follows:

- Tri-axial Apparatus.
- Proving Ring.
- Dial Gauge.
- Model container of diameter 25cm and depth of 20.5cm.
- Circular Steel Plate of 6cm diameter and 1cm thick as a footing.

3.8.3.1 Experimental Setup

The experimental setup and various parts of the setup are shown in the figure 3.9.

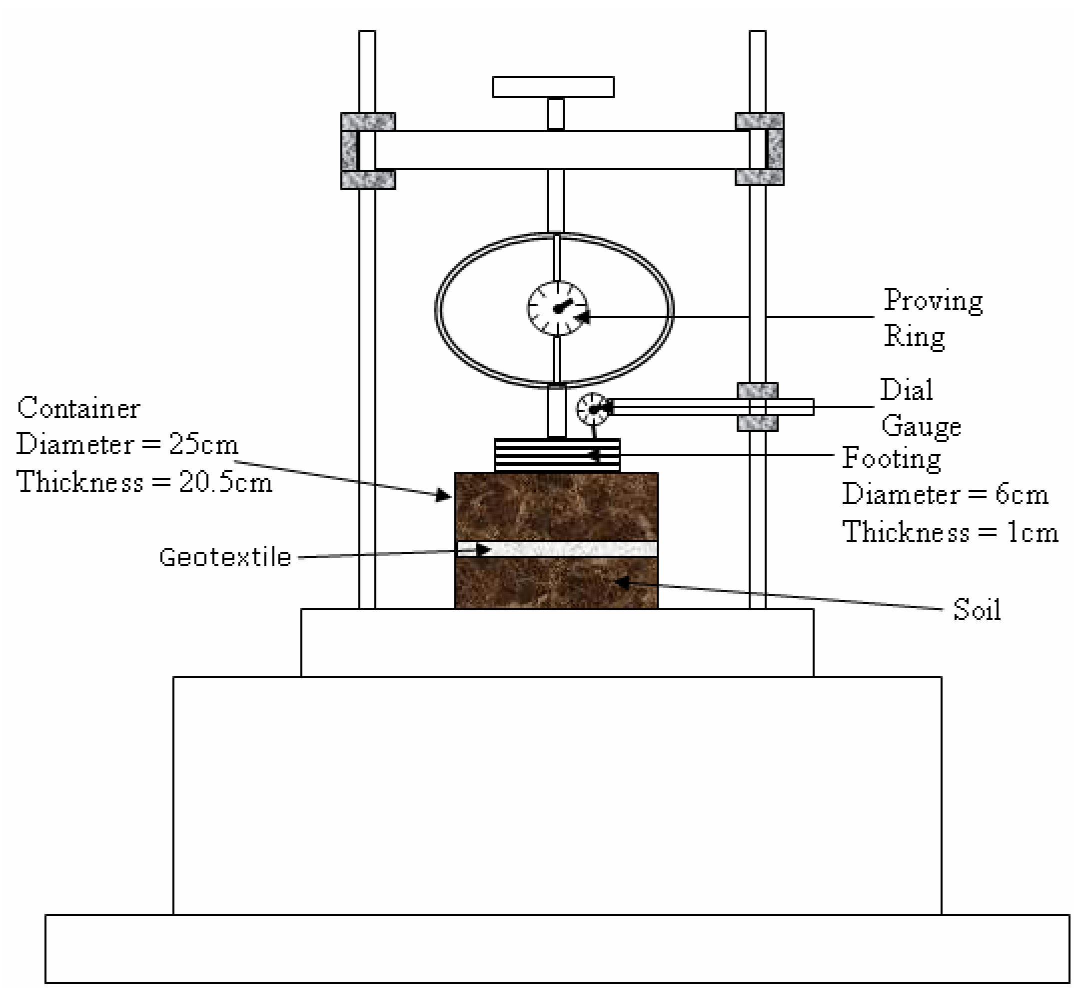

Fig. 3.9 Experimental Setup (Tri-axial Apparatus)

The model container is made up of steel. The diameter of container is 25cm and depth is 20.5cm. The diameter of 25cm for a footing of 6cm on soil with angle of internal friction of 37^0 is found adequate by calculation to contain the failure surface within the container. The load is applied by a constant strain rate apparatus. The axial load on the footing is measured by a proving ring placed centrally between the footing and a fixed support at the top. For settlement observations, a dial gauge is placed on the top of the footing and is independently supported.

3.8.3.2 Preparation of Sample

The sample of soil is prepared as per the following procedure:

- Unreinforced Condition:

  First 18.11 kg of soil is taken in that 12% of moisture content is added. Then in 3 layers the soil is poured in to the container. Thickness of each layer should be kept 6.83cm as per depth of the container. For each layer of soil 75 blows of compaction is given for the uniformity of the soil. Total 225 blows of compaction are given for both the condition. Then the model container is placed on the base of the tri-axial apparatus.
- Reinforced Condition:

  For this condition also the 18.11 kg of soil is taken and add 12% moisture content for the same testing condition. The geotextile is placed 2cm below the bottom of the footing. For this case the soil is poured in 3 layers of 6.17cm as per the 18.5cm depth of container below the bottom of the geotextile. For each layer 68 blows of compaction is given. Then on the top of the soil geotextile is placed. For above 2cm portion of soil 21 blows of compaction are given. In this case also overall 225 blows of compaction are given.

3.8.3.3 Application of Load and Settlement Measure

The tests are carried out on tri-axial apparatus. The model container is placed on the base of the apparatus. The footing is placed centrally on the leveled surface on soil. The proving ring is attached to the frame of the apparatus. The proving ring is fixed in such a manner that it just touched the footing. The load is applied by a constant strain rate apparatus. The strain rate used is 0.89 mm/minute. Before the commencement of the loading, care is taken to see that there is no eccentricity of the applied load. For settlement observations, a dial gauge is attached to the footing. The load is applied continuously until the load-settlement curve becomes constant.

3.8.4 Discussion of Test Results

Load settlement observations are taken for both the conditions and it is presented in the tabular form as follows (see table 3.9):

Table 3.9 Load-Settlement results for all conditions

Settlement (mm)	Load					
	Unreinforced		2 cm below footing		4 cm below footing	
	in kN	in Division	in kN	in Div.	in kN	in Div.
0.89	0.12	12	0.4	39	0.39	38
1.78	0.12	12	0.72	71	0.74	72
2.67	0.12	12	0.79	77	1.09	106
3.56	0.17	17	0.96	94	1.31	128
4.45	0.31	30	1.18	116	1.49	146
5.34	0.52	51	1.28	125	1.64	161
6.23	0.75	73	1.35	132	1.77	173
7.12	0.99	97	1.43	140	1.89	185
8.01	1.18	116	1.48	145	2	196
8.9	1.38	135	1.53	150	2.09	205
9.79	1.53	150	1.59	156	2.16	212
10.68	1.67	164	1.66	163	2.24	220
11.57	1.79	175	1.84	180	2.33	228
12.46	1.92	188	1.89	185	2.4	235
13.35	2.03	199	2.06	202	2.48	243
14.24	2.13	209	2.13	209	2.54	249
15.13	2.19	215	2.18	214	2.6	255
16.02	2.32	227	2.35	230	2.64	259
16.91	2.41	236	2.44	239	2.66	263
17.8	2.49	244	2.55	250	2.68	268
18.69	2.57	252	2.6	255	2.73	273
19.58	2.65	260	2.66	261	2.85	279
20.47	2.74	268	2.75	269	2.91	285
21.36	2.84	278	2.83	277	3.01	295
22.25	2.92	286	2.94	288	3.13	307

23.14	3.01	295	3.02	296	3.27	321
24.03	3.09	303	3.11	305	3.45	338
24.92	3.18	312	3.22	316	3.56	349
25.81	3.28	321	3.34	327	3.69	362
26.7	3.37	330	3.44	337	3.81	373
27.59	3.47	340	3.55	348	3.95	387
28.48	3.58	351	3.72	365	4.08	400
29.37	3.67	360	3.93	385	4.21	413
30.26	3.77	370	4.04	396	4.34	425
31.15	3.89	381	4.1	402	4.43	434
32.04	3.99	391	4.18	410	4.51	442
32.93	4.1	402	4.25	417	4.67	458
33.82	4.21	413	4.34	425	4.77	467
34.71	4.33	424	4.44	435	4.85	475
35.6	4.44	435	4.52	443	4.98	488
36.49	4.55	446	4.65	456	5.05	495
37.38	4.69	460	4.81	471	5.18	508
38.27	4.82	472	4.99	489	5.3	519
39.16	4.94	484	5.11	501	5.46	535
40.05	5.07	497	5.2	510	5.58	547
40.94	5.19	509	5.33	522	5.69	558
41.83	5.33	522	5.49	538	5.81	569
42.72	5.46	535	5.65	554	5.88	576
43.61	5.6	549	5.8	568	5.97	585
44.5	5.76	564	5.94	582	6.1	598
45.39	5.92	580	6.11	599	6.23	611
46.28	6.07	595	6.23	611	6.4	627
47.17	6.22	610	6.42	629	6.48	635
48.06	6.22	610	6.54	641	6.61	648
48.95	6.22	610	6.73	660	6.7	657
49.84	-	-	6.92	678	6.8	666
50.73	-	-	7.06	692	6.93	679
51.62	-	-	7.28	714	7.07	693
52.51	-	-	7.48	733	7.07	693
53.4	-	-	7.64	749	7.07	693
54.29	-	-	7.79	763	-	-
55.18	-	-	7.9	774	-	-
56.07	-	-	8.04	788	-	-
56.96	-	-	8.18	802	-	-
58	-	-	8.18	802	-	-
59	-	-	8.18	802	-	-

Load settlements plots are prepared for both the conditions as mentioned before (see fig. 3.10):

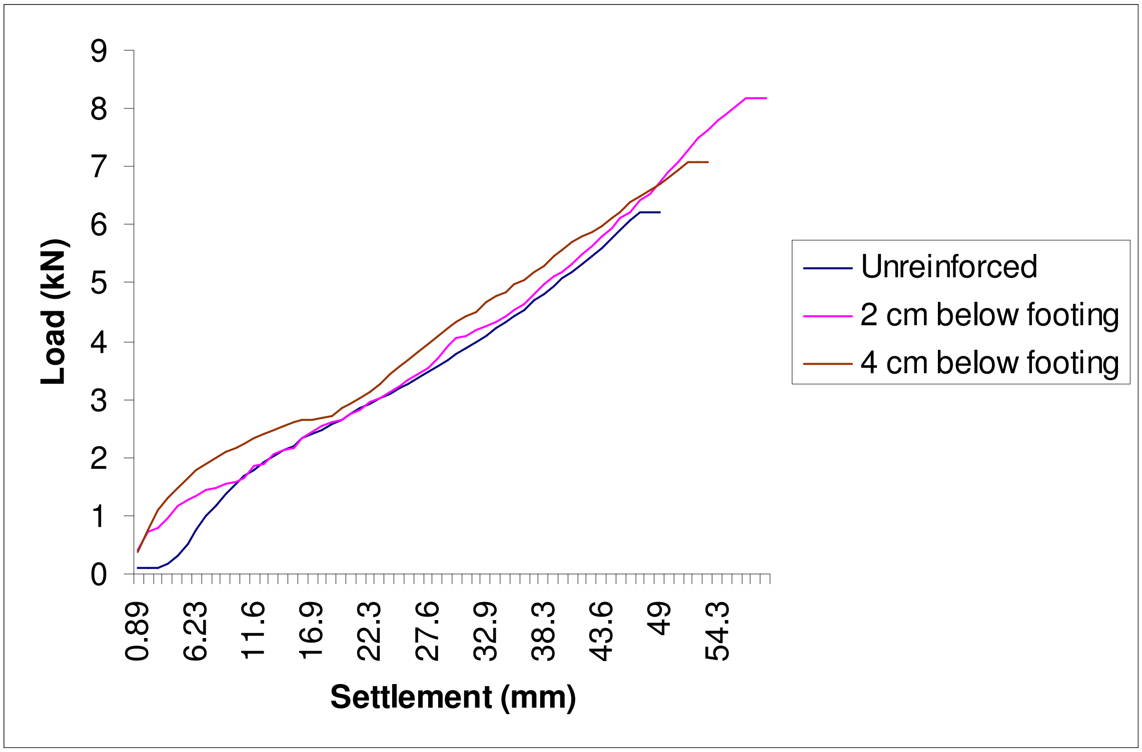

Fig. 3.10 Load-Settlement Curve for all conditions

From the study of these results and plots, the following observations are made:

For footing on soil without geotextile, the soil failed at a load of 6.22 kN giving a bearing capacity of 219.98 kN/m^2. During initial loading, the settlement rate is high. This is due to the reason that the footing is placed on the top of the soil surface and there is no confinement available to the footing. Therefore, slight initial settlement is required for the footing to set.

For the second condition, the footing load kept on increasing until the maximum load of 8.18 kN, when the soil failed. The failure is indicated by continuous settlement with no further increase in the load. The bearing capacity is 289.31 kN/m^2 which is higher than the case of unreinforced soil. The increase is 31.5%.

For third condition, the load increased very fast with relatively low settlement until it failed at load of 7.07 kN. The bearing capacity thus found is 250.05 kN/m2 which indicates 14% improvement on the first case with no geotextile.

From these results, the following plot is prepared to study the effect of geotextile on bearing capacity of soil. From critical study of this plot, the following concluding remarks can be made.

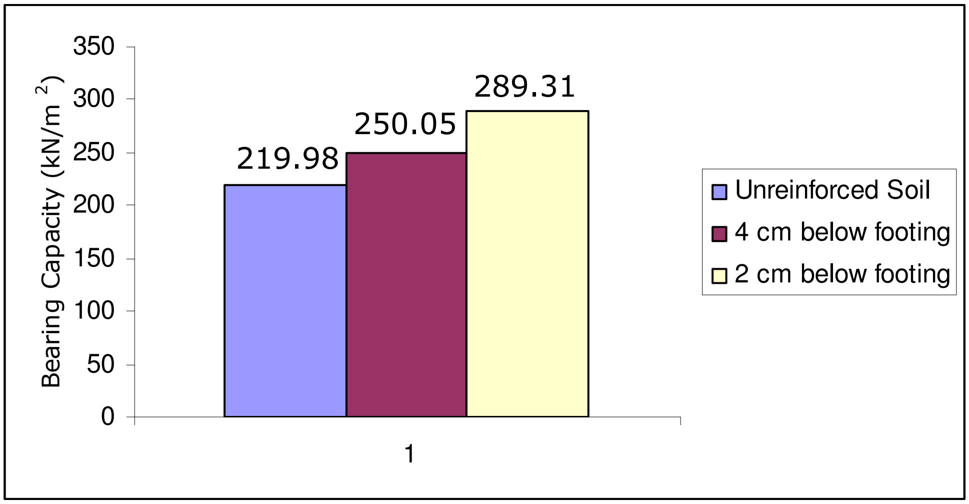

Fig. 3.11 Comparison of bearing capacity of soil

3.8.5 Closing Remarks

There is definite increase in bearing capacity when the soil is reinforced with the geotextile.

The increase in bearing capacity of soil is approximately 10 to 35% when soil is reinforced with the geotextile compared to unreinforced soil.

So from this study it is clear that there is improvement in bearing capacity of soil when it is reinforced with the woven geotextiles. So for the soil with low bearing capacity it is advisable to adopt the reinforced earth technology to increase the bearing capacity of soil.

4. REINFORCED EARTH RETAINING WALL

4.1 GENERAL

Reinforced earth has found greatest use in the construction of retaining structures. Several thousand retaining walls and abutments constructed all over the world in the last 30-35 years bear testimony to the soundness of the concept of reinforced earth and rationally of the design. Reinforced earth walls possess certain definite advantages over other conventional types of walls. They are generally more economical if the wall heights are large or when the sub soil conditions are poor. They can be rapidly constructed and require relatively simple equipment for construction. Since soil forms the bulk of their volume, they can be considered as flexible structures with greater ability to withstand differential settlement than the rigid retaining walls. Because of the large base to height ratio, the foundation stress distribution is nearly uniform with little stress concentration at the toe. This enables the construction of high retaining structures, the height being limited practically by the overburden stress which the base soil can bear.

4.2 TYPES OF RETAINING WALLS

The retaining walls shall be classified on the basis of type of construction and mechanics of behavior. The retaining walls are classified in to three broad categories as follows:

1. Externally stabilized systems: externally stabilized systems are those that resist the applied earth loads by virtue of their weight and stiffness. This was the only type of retaining structure available before 1960, and they are still very common. These structures are subdivided in to two categories as
    - Gravity walls.
    - In-situ walls.

2. Internally stabilized systems: internally stabilized systems reinforce the soil to provide the necessary stability. Various schemes are available, all of which have been developed since 1960. They can be subdivided in to two categories as
   - Reinforced earth walls.
   - In-situ reinforcement.

3. Hybrid systems: these are walls which combine elements of both externally stabilized walls (e.g. gravity walls) and internally stabilized walls (e.g. reinforced earth). They can be subdivided in to three categories as
   - Anchored earth retaining walls.
   - Tailed concrete block retaining walls.
   - Tailed gabion retaining walls.

Reinforced Earth Retaining Walls: A reinforced earth wall is a coherent gravity mass that can be engineered to meet specific loading requirements. It consists of precast concrete facing panels, metallic soil reinforcement and granular backfill. Its strength and stability are derived from the frictional interaction between the granular backfill and the reinforcements, resulting in a permanent and predictable bond that creates a unique composite construction material. The reinforced earth technology came in to existence in the year 1963, form the pioneer work of French engineer Henry Vidal. The use of reinforced earth retaining walls then spread very rapidly and by the early 1970s many significant projects were in place in several countries. The experience with this work has indicated that the application of reinforced earth technology in place of R.C.C retaining walls results in substantial saving in cost as well as time.

4.3 APPLICATIONS OF THE RETAINING WALLS

Following are the few applications of retaining walls:

a) Roads and highways.
b) Railways.

c) Industries.
d) Marine and dams.
e) Other applications like…
- As aircraft splinter protection walls and barricades.
- The reinforced earth technology is helping architects and engineers to add beauty and distinction to structural appearance with a wide selection of architectural finishes.
- A few of the other applications of reinforced earth technology include retaining walls at airports, golf courses and sports facilities.
- The retaining walls are also used extensively to develop sites for building complexes.

4.4 COMPONENTS OF THE REINFORCED EARTH WALL

The following are the principal elements of a reinforced earth wall:

1. Reinforced back fill.
2. Reinforcement.
3. Facing panel.
4. A leveling pad.
5. Mechanical connection between reinforcement and facing panel.

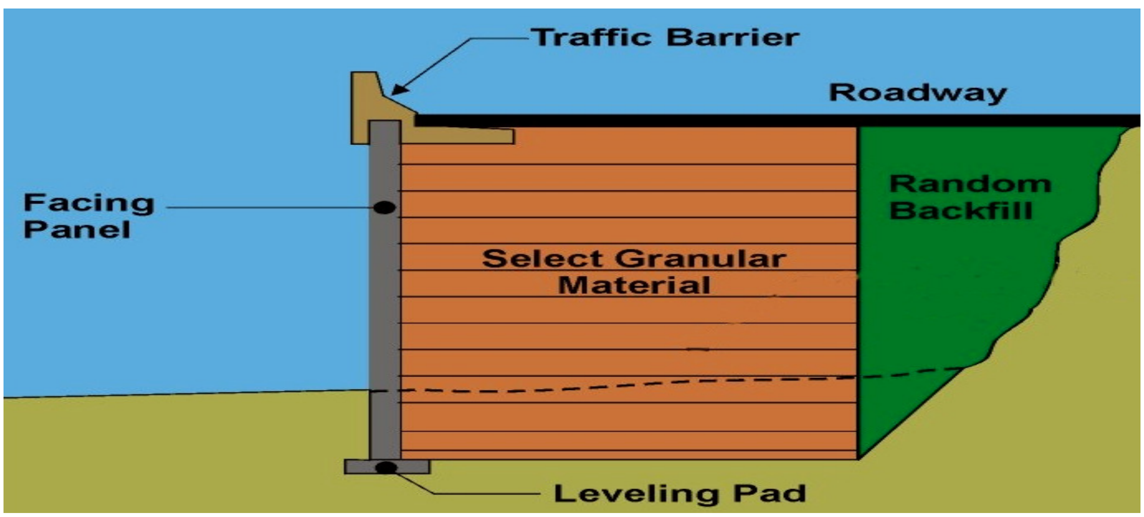

Fig. 4.1 Components of Reinforced Earth Wall

Fig. 4.1 above shows the assembly of the components of reinforced earth wall with precast concrete panels for facing, steel strips for reinforcement, reinforced back fill and a leveling pad for footing of wall.

1. Reinforced back fill: the soil fill extending from the facing to the end of the reinforcement, is referred to as reinforced back fill, while the soil beyond the reinforcement is referred to as random back fill.

   The select fill must satisfy certain minimum requirements. Since the reinforcement is subjected to large tensile forces, sufficient frictional resistance should develop between the soil and the reinforcement to have adequate factor of safety against failure. Therefore, cohesion less (frictional) soils are recommended for these structures, while the soil beyond the strips is almost any soil can be used.

2. Reinforcement: one end of reinforcement is connected to the facing elements while the other end is kept free in soil or anchored with concrete in soil. Types of reinforcements generally used are strips, sheets, mats or nets, geotextiles etc. The dimensions of the strips depend up on the height of the structures and external loading and site conditions. Usually, the length of the strips is about 80% of the height of the wall. The principal functions of providing reinforcing strips are 1) to increase its lateral stability, and 2) to reduce its lateral deformation. The clear vertical spacing of reinforcing elements shall be not less than 150 mm. Element thicknesses shall not be less than 1.5 mm.

3. Facing panel: the facing elements may comprise of semi-elliptical section of galvanized steel or more commonly of precast concrete panels of cruciform shape (see Fig. 4.2) with suitable edges for interlocking. The facing or skin elements are provided with nominal reinforcement and protruding galvanized steel stubs or tabs of the same size and material as reinforcing strips which in turn are connected in a suitable manner to the

reinforcing strips embedded in the soil as the construction progresses. The base is usually taken below the existing ground to a depth equal to about one tenth of the height in level ground and may go up to a maximum of about one fifth the height in steep terrain.

a) Cruciform Facing Panel

b) Rectangular Facing Panel

c) Hexagonal Facing Panel

Fig. 4.2 Various Types of Facing Panel

4. Leveling pad: a concrete level pad for footing of generally 30 cm wide and 15 cm thick is laid in mass concrete with 40 mm size hard broken stone below the first course of the facing elements.

5. Mechanical connection between reinforcements and facing elements: the reinforcing strips are fastened to the protruding stubs from the precast concrete panels by bolts, nuts and washers of the same material as that of reinforcing strips.

4.5 CONSTRUCTION OF THE REINFORCED EARTH WALL

The following is an outline of the principal sequence of construction for reinforced earth retaining wall with precast facing:

1. Preparation of site for construction of reinforced earth structure:

    - The alignment of the proposed structure should be peg-marked on the ground in the length and width directions.
    - Clearing of all organic matter, vegetation, slide debris and other unsuitable material under the proposed construction area.

2. Placement of a leveling pad for the erection of the facing elements:

    This generally unreinforced concrete pad is often only 300 mm and 150 mm thick, where concrete panels are subsequently erected. The purpose of this pad is to serve as a guide for facing panel erection and is intended as a foundation bed to the facing over it.

3. Erection of the first row of facing panels on the prepared leveling pad:

    Lay the first facing elements to the entire length of the structure on the ground and check the alignment of the skin elements in horizontal and vertical directions and correct them if necessary. This first course may be braced on the facing side to ensure perfect vertical alignment.

4. Placement and compaction of backfill up to the level of the first layer of reinforcement and its compaction:

   The fill should be compacted to the specified density and within the specified range of optimum moisture content. A key to good performance is consistent placement and compaction. Wall fill lift thickness must be controlled based on specification requirements and vertical distribution of reinforcement elements. The filling carried out stage wise up to the level of the first row of the horizontal reinforcing strip duly compacted. The compaction within 2 m from the facings is done by propelled stoneroller.

5. Placement of the first layer of reinforcing elements on the backfill:
   - Fix the first row of strips to the concrete panel with bolts and nuts align.

6. Placement of the backfill over the reinforcing elements to the level of the next reinforcement layer and compaction of the backfill:

   - After fixing the first row of reinforcing strips, further is continued up to the level of second strips.

7. The next row of facing panels is placed over already panels.

8. Filling is continued duly compacting up to the next row of strips.

9. The previously outline steps are repeated for each successive layer up to the required height of the reinforced earth retaining wall.

4.6 FAILURE MODES OF THE REINFORCED EARTH WALL

As with classified gravity and semi gravity retaining structures, the internal stability of the reinforced earth mass is ensured against two modes of failure and the external stability of the reinforced earth mass is ensured against four modes of failure.

Two potential internal failure mechanisms are:

1. Tension failure: A failure mode in which the reinforced earth volume becomes unstable due to the breaking of the reinforcement in tension. In a simple unloaded structure, strip-breaking failure generally starts at the toe of the wall and progressively develops upward and away from the skin as shown in the Fig. 4.3 (a).

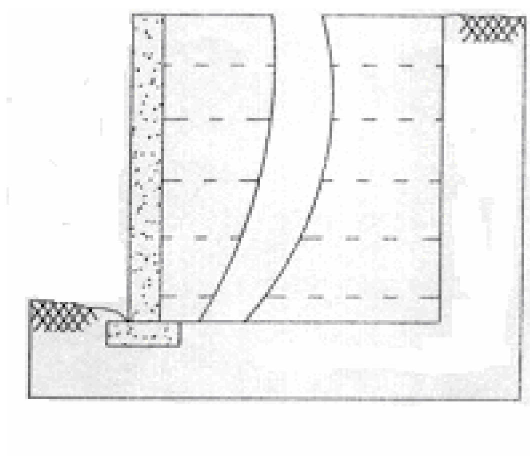

Fig. 4.3 (a) Tension failure

2. Pull out failure: A failure mode in which the reinforced earth volume becomes unstable due to the slipping of the reinforcement from the soil on account of inadequate length of reinforcing strips to develop sufficient friction between soil and the reinforcing strips. The pull out failure of reinforced earth retaining wall is shown in the Fig. 4.3 (b).

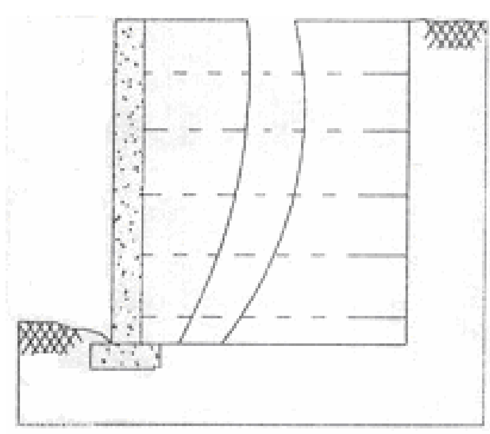

Fig. 4.3 (b) Pull out failure

Four potential external failure mechanisms are:

1. Sliding failure: A failure in which a considerable active force and particularly the angle at which these forces may be applied can cause the reinforced earth structure to slide along the foundation and bring about a failure in the reinforced earth mass. The sliding failure of reinforced earth retaining wall is as shown in the Fig. 4.3(c).

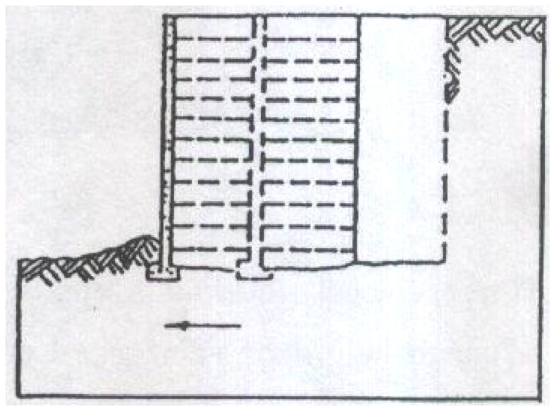

Fig. 4.3 (c) Sliding failure

2. Overturning failure: The characteristics of a flexible but coherent mass in a reinforced earth structure make this type of failure highly improbable. A tilting of the upper portion of the wall may occur if the reinforcing strips are not long enough. But such a failure would be due to internal instability in the reinforced earth structure rather than to the type of failure which would occur in a conventional rigid wall. The overturning failure of reinforced earth retaining wall is shown in the Fig. 4.3 (d).

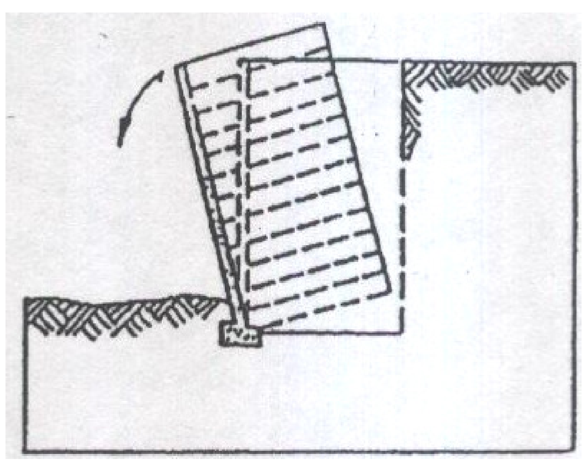

Fig. 4.3(d) Overturning failure

3. Bearing failure: As required in all foundation problems, the bearing capacity of the foundation soil must be established prior to taking up the construction of a reinforced earth structure. If the allowable bearing capacity is less than the bearing pressure then this type of failure is occurring. The bearing failure of reinforced earth retaining wall is shown in the Fig. 4.3(e).

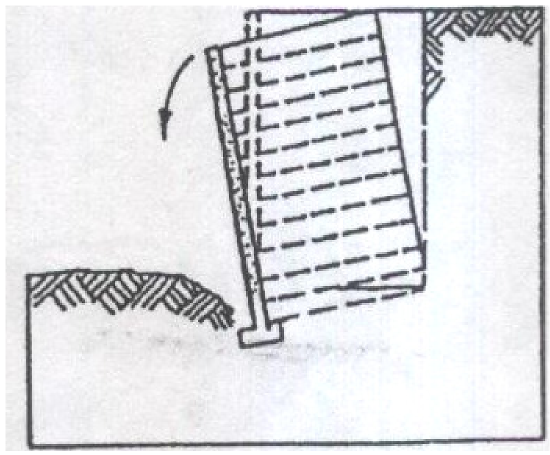

Fig. 4.3 (e) Bearing failure

4. Slip failure: As in any retaining structure, the possibility of a general slope failure which would take out the reinforced earth mass along with a portion of the structure. The factor of safety for reinforced earth structure against slip failure can be taken as 1.5 as for conventional retaining structures. The slip failure of reinforced earth retaining wall is as shown in the Fig. 4.3(f).

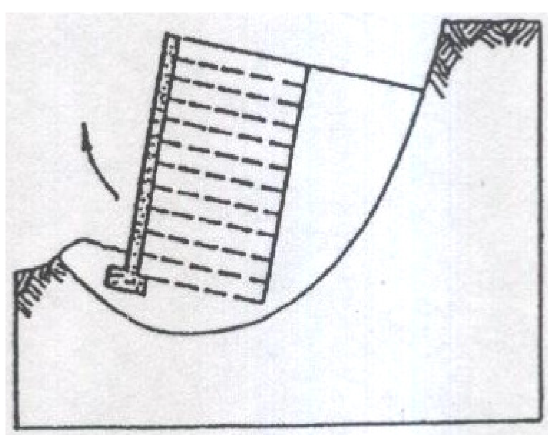

Fig. 4.3 (f) Slip failure

Fig. 4.3 Failure modes of Reinforced Earth Wall

4.7 GENERAL DESIGN CONSIDERATIONS FOR REINFORCED EARTH WALL

The general design procedure of any mechanically stabilized retaining wall can be divided in to two parts:

- Satisfying internal stability requirements.
- Checking the external stability of the wall.

The internal stability checks involve determining tension and pull out resistance in the reinforcing elements and the integrity of facing elements.

The external stability checks include checks for overturning, sliding and bearing capacity failure.

4.7.1 General Considerations for the Design

The general considerations for the design are:

- Selection of backfill material: granular, freely draining materials is normally specified. However, with the advent of geogrids, the use of cohesive soil is gaining ground.
- Backfill should be compacted with care in order to avoid damage to the reinforcing material.
- Rankine's theory for the active state is assumed to be valid.
- The wall should be sufficiently flexible for the reinforcement outside the assumed failure zone.
- Tension stresses are considered for the reinforcement outside the assumed failure zone.
- Wall failure will occur in one of three ways.
  -Tension in reinforcements.
  -Bearing capacity failure.
  -Sliding of the whole wall soil system.
- Surcharges are allowed on the backfill. The surcharges may be permanent (such as a roadway) or temporary.

a) Temporary surcharges within the reinforcement zone will increase the lateral pressure on the facing unit which in turn increases the tension in the reinforcements, but does not contribute to reinforcement stability.

b) Permanent surcharges within the reinforcement zone will increase the lateral pressure and tension in the reinforcement and will contribute additional vertical pressure for the reinforcement friction.

c) Temporary or permanent surcharges outside the reinforcement zone contribute lateral pressure which tends to overturn the wall.

- The total length L of the reinforcement goes beyond the failure plane by a length L_e. Only length L_e (effective length) is considered for computing frictional resistance. The length L_R lying within the failure zone will not contribute for frictional resistance (See Fig. 4.4).

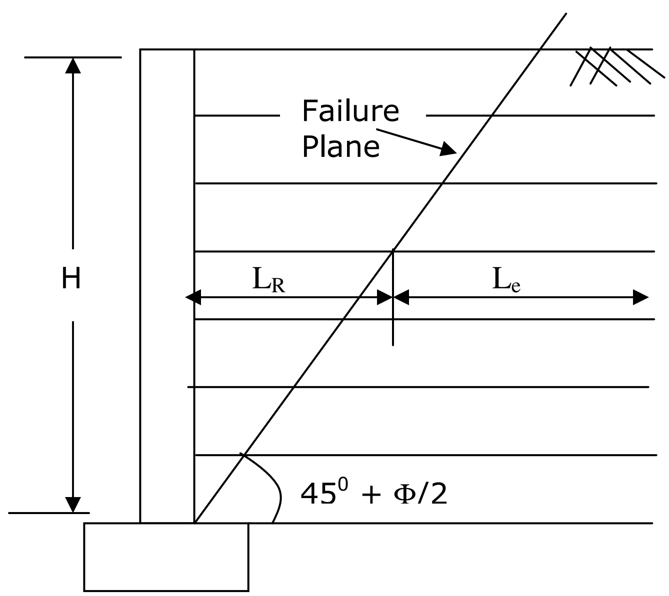

Fig. 4.4 Principles of Reinforced Earth Wall Design

- For the purpose of design the total length of reinforcement L remains the same for the entire height of wall H. designers, however, may use their discretion to curtail the length at lower levels.

4.7.2 Design Steps of Retaining Wall with Metal Strip Reinforcement

Following is the step-by-step design procedure of metal strip reinforced earth wall:

General:

1. Determine the height of the wall (H) and the properties of the granular backfill material, such as unit weight (γ_1) and the angle of friction (Φ_1).

2. Obtain the soil-tie friction angle (Φ_μ) and the required values of FS_B and FS_P.
   FS_B = factor of safety against tie breaking.
   FS_P = factor of safety against tie pull out.

Internal Stability:

3. Assume values for horizontal and vertical tie spacing. Also assume the width of reinforcing strip (w) to be used.

4. Calculate the active pressure (σ_a) at any depth z form equation below.

$$\sigma_a = \sigma_{a(1)} + \sigma_{a(2)} \quad \dots (4.1)$$

   Where, $\sigma_{a(1)} = K_a x \gamma_1 x z$ (active pressure due to soil only)

$$\sigma_{a(2)} = M\left[\frac{2q}{\pi}(\beta - \sin\beta\cos 2\alpha)\right] \text{(Active pressure due to surcharge)}$$

$$M = 1.4 - \frac{0.4b'}{0.14H} \geq 1 \qquad K_a = \tan^2\left(45 - \frac{\phi_1}{2}\right) \quad \dots (4.2)$$

   K_a = active pressure coefficient.
   q = intensity of surcharge per unit area.

5. Calculate the tie forces at various levels from equation below.
   T = active earth pressure at depth zxarea of wall to be supported by tie

$= \sigma_a \text{ x } (S_V x S_H)$ ... (4.3)

S_V = vertical spacing of the reinforcement ties.

S_H = horizontal spacing of the reinforcement ties.

6. For the known values of FS_B, calculate the thickness of ties (t) to resist the tie breakout.

$$T = \sigma_a \times (S_V \times S_H) = \frac{wtf_y}{FS_B} \quad \text{or} \quad t = \frac{(\sigma_a \times S_V S_H) \times [FS_B]}{wf_y} \quad \text{... (4.4)}$$

f_y = grade of the reinforcing steel.

w = width of the reinforcement tie.

The convention is to keep the magnitude of t the same at all levels, so in above equation σ_a should equal $\sigma_{a\,(max)}$.

7. For the known values of Φ_μ and FS_P, determine the length L, of the ties at various levels from equation below.

$$L = \frac{(H - z)}{\tan\left(45 + \frac{\phi_1}{2}\right)} + \frac{FS_P \times \sigma_a \times S_V S_H}{2w\sigma_v \tan \phi_\mu} \quad \text{... (4.5)}$$

σ_v = effective vertical pressure at a depth z.

8. The magnitudes of S_V, S_H, t, w and L may be changed to obtain the most economical design.

External Stability:

9. A check for overturning can be done as per the following equation.

$$FS_{(overturning)} = \frac{M_R}{M_0} \quad \text{Or}$$

$$FS_{(overturning)} = \frac{\left[W_1 \times x_1 + W_2 \times x_2 + \ldots + qa' \times \left(b' + \frac{a'}{2}\right)\right]}{\left[\int_0^H \sigma_a dz\right] \times z'}$$

... (4.6)

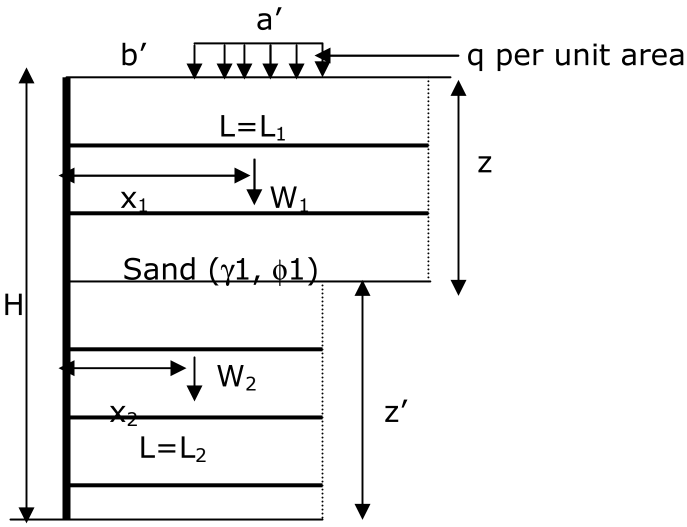

Fig. 4.5 Section of Retaining wall

Where, $M_0 = P_a x z'$ and Pa = active force = $\int_0^H \sigma_a dz$

The resisting moment per unit length of the wall is,

$$M_R = W_1 x x_1 + W_2 x x_2 + \ldots + qa' x (b' + a'/2) \qquad \ldots (4.7)$$

10. The check for sliding can be done by using equation below.

$$FS_{(sliding)} = \frac{(W_1 + W_2 + \ldots + qa') \times [\tan(k \times \phi_1)]}{P_a} \qquad \ldots (4.8)$$

Where, k = 2/3.

11. Check for ultimate bearing capacity failure. The ultimate bearing capacity can be given as:

$$q_u = c_2 \times N_c + \frac{1}{2}\gamma_2 \times L_2' \times N_\gamma \qquad \ldots (4.9)$$

The bearing capacity factors N_c and N_γ correspond to the soil friction angle Φ_2, which are to be, taken from IS: 6403-1981.

In above equation L_2' is effective length and $L_2' = L_2 - 2e$.

$$\text{Here, e=eccentricity } e = \frac{L_2}{2} - \frac{M_R - M_0}{\sum V} \qquad \ldots (4.10)$$

Where, $\Sigma V = W_1 + W_2 + \ldots + qa'$.

The vertical stress at z=H is $\sigma_{v(H)} = \gamma_1 x H + \sigma_{v(2)}$. … (4.11)

So the factor of safety against bearing capacity failure is,

$$FS_{(bearingcapacity)} = \frac{q_{ult}}{\sigma_{v(H)}} \quad \text{... (4.12)}$$

Generally, minimum values of $FS_{(overturning)}$ = 3, $FS_{(sliding)}$ = 3 and $FS_{(bearing\ capacity)}$ = 3 to 5 are recommended.

4.7.3 Design Steps of Retaining Wall with Geotextile Reinforcement

In this type of retaining wall, layers of geotextile have been used as reinforcement and the backfill is a granular soil. In this type of retaining wall, the facing of the wall is formed by lapping the sheets with a lap length of l_1. When construction of the wall is finished, the exposed face of the wall must be covered; otherwise, the geotextile will deteriorate from exposure to ultraviolet light. Bitumen emulsion or gunite is sprayed on the wall face. A wire mesh anchored to the geotextile facing may be necessary to keep the coating on the face of the wall.

The design of this type of retaining wall is similar to that of retaining wall with metallic strip reinforcement. Following is a step by step design procedure based on the recommendations of Bell and Koerner.
Internal Stability:

1. Determine the active pressure distribution on the wall from

$$\sigma_a = K_a \times \sigma_v = K_a \times \gamma_1 \times z \quad \text{... (4.13)}$$

   Where, K_a = Rankine earth pressure coefficient.
   γ_1 = unit weight of the granular backfill.
   Φ_1 = friction angle of the granular backfill.
   z = Depth of Layer from base of footing.
2. Select a geotextile fabric that has an allowable strength of σ_G (KN/m).

3. Determine the vertical spacing (S_V) of the layers at any depth z from,

$$S_V = \frac{\sigma_G}{\sigma_a \times FS_B} = \frac{\sigma_G}{(\gamma_1 \times z \times K_a) \times [FS_B]} \quad \text{... (4.14)}$$

4. Determine the length of the each layer of geotextile (L) form,

   L = l_r + l_e

   Where, $$l_r = \frac{H - z}{\tan\left(45 + \frac{\phi_1}{2}\right)} \quad \text{and} \quad le = \frac{S_V \times \sigma_a \times FS_P}{2\sigma_v \times \tan\phi_F} \quad \text{... (4.15)}$$

   $\sigma_a = \gamma_1 \times z \times K_a$ and $\sigma_v = \gamma_1 \times z$ FS_P = 1.3 to 1.5

   Φ_F = friction angle at geotextile-soil interface = 2/3xΦ_1.

5. Determine the lap length l_1 from,

$$l_1 = \frac{S_V \times \sigma_a \times FS_P}{4\sigma_v \times \tan\phi_F} \quad \text{... (4.16)}$$

   The minimum lap length should be 1 m.

External Stability:

6. Check the factors of safety against overturning, sliding and bearing capacity failure.

a) factor of safety against overturning:

$$FS_{(overturning)} = \frac{\left[W_1 \times x_1 + W_2 \times x_2 + \ldots + qa' \times \left(b' + \frac{a'}{2}\right)\right]}{\left[\int_0^H \sigma_a dz\right] \times z'} \quad \text{... (4.17)}$$

b) factor of safety against sliding:

$$FS_{(sliding)} = \frac{(W_1 + W_2 + \ldots + qa') \times [\tan(k \times \phi_1)]}{P_a} \quad \text{... (4.18)}$$

c) factor of safety against bearing capacity:

$$FS_{(bearingcapacity)} = \frac{q_{ult}}{\sigma_{v(H)}} \quad \text{... (4.19)}$$

4.8 DESIGN EXAMPLE

4.8.1 Design of Retaining Wall with Galvanized Steel Strip Reinforcement

Data:

Height of the Wall (H) = 9.15 m

Properties of the Material:

Granular Backfill:

Angle of Repose (Φ_1) = 36^o

Density of soil (γ_1) = 17 kN/m^3

Foundation Soil:

Angle of friction (Φ_2) 28^o

Density of soil (γ_2) = 18 kN/m^3

Cohesion (c_2) = 50 kN/m^2

Galvanized Steel Reinforcement:

Width of the Strip (w) = 7.62 cm

Vertical Spacing (S_V) = 0.6 m c/c

Horizontal Spacing (S_H) = 0.9 m c/c

Grade of steel (f_y) = 25 kN/m^2

Soil-Tie friction angle (Φ_μ) = 20^o

F.O.S for breaking (FS_B) = 3

F.O.S for pullout (FS_P) = 3

Corrosion Rate of Steel = 0.00254 cm/Year

Life of the Structure = 50 Years

Facing Panel:

Height of Panel = 1.5 m

Width of Panel = 1.5 m

Thickness of Panel = 0.2 m

Required No. of Panel = 6.1

Fig. 4.5 gives the section of the retaining wall.

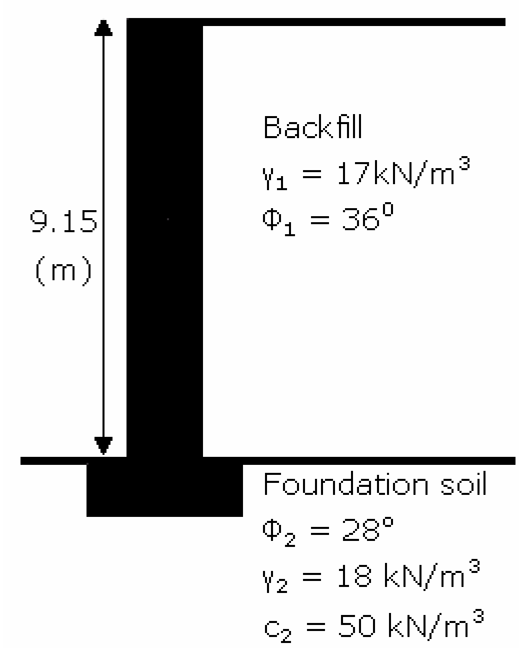

Fig. 4.5 Section of Retaining Wall

Internal Stability Check:

A. Tie Thickness:

Tie Force can be given as $T = \sigma_a \times (S_V \times S_H) = \frac{wtf_y}{FS_B}$

From this equation, Tie thickness will be

$$t = \frac{(\sigma_a \times S_V S_H) \times [FS_B]}{wf_y} = \frac{40.44x0.6x0.9x3}{0.0762x25} = 0.34 \text{ cm}$$

$\sigma_{a(max)}$ = γxHxK$_a$

$$K_a = \tan^2\left(45 - \frac{\phi_1}{2}\right) = 0.26$$

Thickness of the Tie (t) = 0.34 cm

If the rate of corrosion = 0.00254 cm/Year

Life of the structure = 50 Years

Then the actual thickness of the ties will be,

t = 0.47 cm

So, a tie thickness of 0.5 cm would be enough.

B. Tie Length:

Tie Length can be calculated from,

$$L = \frac{(H - z)}{\tan\left(45 + \frac{\phi_1}{2}\right)} + \frac{FS_P \times \sigma_a \times S_V S_H}{2w\sigma_v \tan \phi_\mu}$$

Where, $\sigma_a = K_a \times \sigma_v = K_a \times \gamma_1 \times z$

So, $\sigma_v = \gamma_1 x z$

Here, H = 9.15 m

Φ_1 = 36^o

FS_P = 3

S_V = 0.6 m c/c

S_H = 0.9 m c/c

w = 0.0762 m

Φ_μ = 20^o

K_a = 0.26

γ_1 = 17 kN/m^3

L= (9.15-4.5)/(tan(45+36/2))+(3x19.86x0.6x0.9)/(2x0.0762x76.5xtan20)]

Table 4.1 Calculation of Tie Length

z (m)	σ_a	σ_v	Tie Length (L)	
1.5	6.62	25.5	11.48	m
3	13.24	51	10.716	m
4.5	19.86	76.5	9.9515	m
6	26.48	102	9.1872	m
7.5	33.1	127.5	8.4229	m
9.15	40.38	155.55	7.5822	m

From table 4.1, use Tie Length of L = 9.5 m

External Stability Check:

A. Check for Overturning:

F.O.S against overturning can be,

$$FS_{(overturning)} = \frac{\left[W_1 \times x_1 + W_2 \times x_2 + \ldots + qa' \times \left(b' + \frac{a'}{2}\right)\right]}{\left[\int_0^H \sigma_a dz\right] \times z'}$$

Here, q = a' = b' = 0 (for constant length of ties, see fig. 4.6)

$W_1 = \gamma_1 x H x L$ = 1477.7 kN

Length of the Ties (L) = 9.5 m

x_1 = 3 m

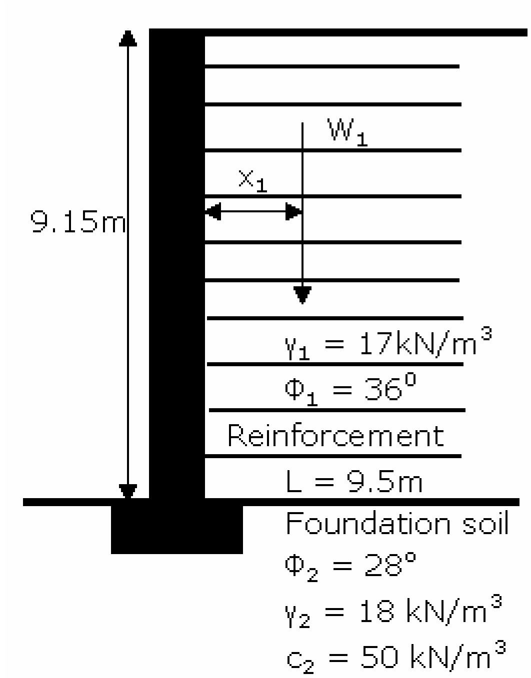

Fig. 4.6 Self Weight of Backfill of Retaining Wall

$P_a = \int_0^H \sigma_a dz$ = (1/2)xγ_1xK_axH^2= 184.75 kN/m

z' = H/3 = 3.05 m

$FS_{(overturning)}$ = [((1477.7x3) +0)/(184.8x3.05)] = 7.86 >3 O.K.

B. Check for Sliding:

F.O.S against sliding can be,

$$FS_{(sliding)} = \frac{(W_1 + W_2 + \ldots + qa') \times [\tan(k \times \phi_1)]}{P_a}$$

Here, q = a' = 0

W_1 = 1477.72 kN

W_2 = 0

k = (2/3) = 0.67

P_a = 184.75 kN/m

Φ_1 = 36°

tan(k*Φ_1) = 0.4868

$FS_{(sliding)}$ = 3.89 > 3 O.K.

C. Check for Bearing Capacity:

$$q_u = c_2 \times N_c + \frac{1}{2}\gamma 2 \times L_2' \times N_\gamma$$

From bearing capacity factor table,

For $\Phi_2 = 28^o$

$N_c =$ 25.8

$N_\gamma =$ 16.78

Eccentricity $e = \frac{L_2}{2} - \frac{M_R - M_0}{\sum V}$

Length of Ties (L_2) = 9.5 m

$M_R = W_1 x x_1$ = 4433.17 kNm

$M_0 = P_a x(x-x_1)$ = 1136.23 kNm

$\Sigma V = W_1+W_2+\ldots$ = 1477.72 kN

Eccentricity (e) = 2.52 m

Length (L'_2) = L_2-(2xe) = 4.46 m

Ultimate B.C (q_{ult}) = 1963.9 kN/m^2

Now, $\sigma_{V(H)} = \gamma_1 xH$ = 155.55 kN/m^2

F.O.S against bearing capacity can be,

$$FS_{(bearingcapacity)} = \frac{q_{ult}}{\sigma_{v(H)}}$$

$FS_{(bearingcapacity)}$ = 1963.9/155.55 = 12.62 > 5 O.K.

Design of Facing Panel:

Force on the Panel (T) = 21.81 kN ($T = \sigma_a \times S_V \times) S_H$

Reaction on the Panel = 87.22 kN

U D L on Panel = 58.152 kN/m

Maximum B.M. = 7.269 kNm

Effective Depth = 28.19 cm

Lever Arm= (D_{eff}-4)xS_H= 21.77 cm

Area of Steel:

$A_{st} = \frac{B.M._{max} x 10^6}{L.A x 9.81 x 2000}$ = 170.21 mm^2

Provide 10mm dia. at 200mm c/c

Provide footing of following dimension:

Width of footing = 300 mm

Thickness of footing = 150 mm.

Fig. 4.7 and table 4.2 give the details of reinforcement in retaining wall.

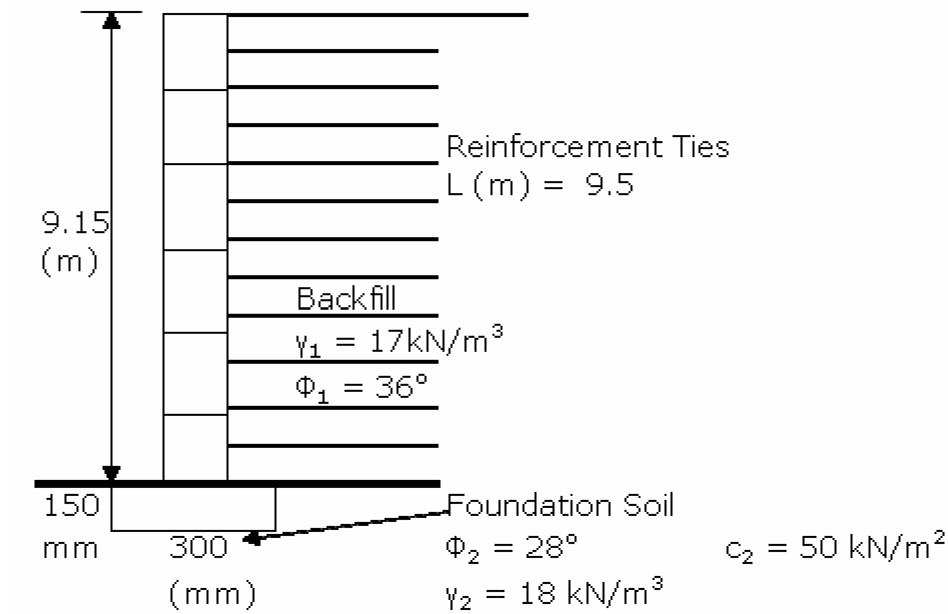

Fig. 4.7 Details of Reinforcement in Reinforced Earth Retaining Wall

Table 4.2 Design Parameters of Metallic Ties Reinforcement

Sr. No.	Criteria	Results
	Internal Stability Check:	
1	Tie Thickness (cm)	0.47
2	Tie Length (cm)	950
3	Tie Width (cm)	7.62
	External Stability Check:	
4	$FS_{(overturning)}$ =	7.87
5	$FS_{(sliding)}$ =	3.89
6	$FS_{(bearing\ capacity)}$ =	12.63

4.8.2 Design of the Geotextile Reinforced Retaining Wall

Data:

Height of the Wall (H) = 4.9 m

Properties of the Material:

Granular Backfill: γ_1 = 18 kN/m^3

Φ_1 = 36^o

Geotextile: σ_G = 14 kN/m

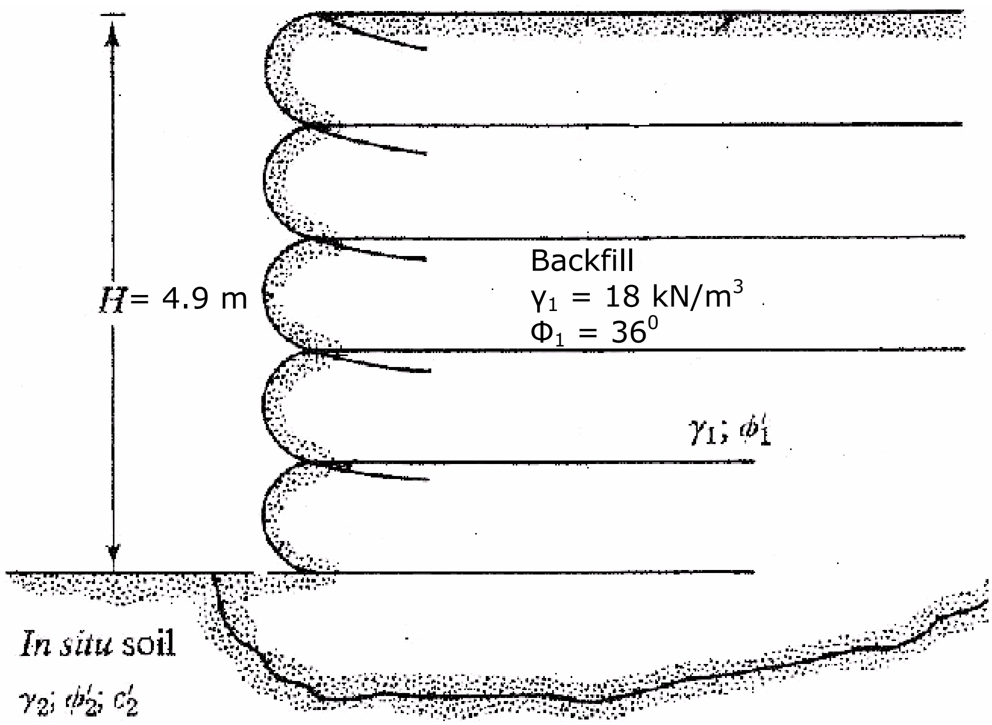

Fig. 4.8 Section of the Geotextile Reinforced Retaining Wall

Determination of Active Earth Pressure Coefficient (K_a):

$$K_a = \tan^2\left(45 - \frac{\phi_1}{2}\right) = 0.26$$

Determination of Vertical Spacing (S_V):

To find SV, let make few trials.

$$S_V = \frac{\sigma_G}{\sigma_a \times FS_B} = \frac{\sigma_G}{(\gamma_1 \times z \times K_a) \times [FS_B]}$$

Here, FS_B = 1.5

Let, z = 2.45 m, 3.65 m and 4.9 m.

So, for z = 2.45 m

S_V = 0.815 m

For z = 3.65 m

S_V = 0.547 m

For z = 4.9 m

S_V = 0.408 m

So, use S_V = 50 cm for z = 0 to 2.45 m

And S_V = 40 cm for z > 2.45 m.

Determination of Length of Geotextile (L):

From equation,

$L = l_r + l_e$

Where,

$$l_r = \frac{H - z}{\tan\left(45 + \frac{\phi_1}{2}\right)} = [(4.9-0.4)/(\tan(45+36/2))] = 2.293 \text{ m}$$

$$le = \frac{S_V \times \sigma_a \times FS_P}{2\sigma_v \times \tan\phi_F} = \frac{0.5\text{x}1.87\text{x}1.5}{2\text{x}7.2\text{x}0.445} = 0.219 \text{ m}$$

$\Phi_F = 2/3\text{x}\Phi_1 = 24^o$

So, $\tan\Phi_F = 0.445$

$FS_P = 1.5$

$\sigma_a = \gamma_1 \times z \times K_a$

$\sigma_v = \gamma_1 \times z$

So, $l_r = 0.51 \times (H-z)$

And $l_e = 0.437 \times SV$

Height of the wall (H) = 4.9 m

Now, following Table 4.3 can be prepared.

Table 4.3 Calculation of Length of Geotextile

z (m)	S_V (m)	l_r (m)	l_e (m)	L (m)
0.4	0.5	2.293	0.219	2.512
1.4	0.5	1.783	0.219	2.002
1.94	0.5	1.508	0.219	1.727
2.44	0.5	1.253	0.219	1.472
2.85	0.4	1.045	0.175	1.219
3.65	0.4	0.637	0.175	0.812
4.45	0.4	0.229	0.175	0.404

So, use L = 2.6 m for $z \le 2.45$ m

and L = 1.25 m for $z > 2.45$ m.

Determination of Lap Length (l_1):

From equation,

$$l_1 = \frac{S_V \times \sigma_a \times FS_P}{4\sigma_v \times \tan\phi_F}$$

Where,

$\sigma_a = \gamma_1 \times z \times K_a$

$\sigma_v = \gamma_1 \times z$

$FS_P = 1.5$
$\tan\Phi_F = 0.445$

$K_a = 0.26$

So, $l_1 = 0.219 \text{x} S_V$

At z= 4.9 m, $S_V = 0.5$ m

$l_1 = 0.109$ m

But, minimum lap length (l_1) = 1 m

So, use $l_1 = 1$ m

Fig. 4.9 gives the details of geotextile reinforced earth retaining wall.

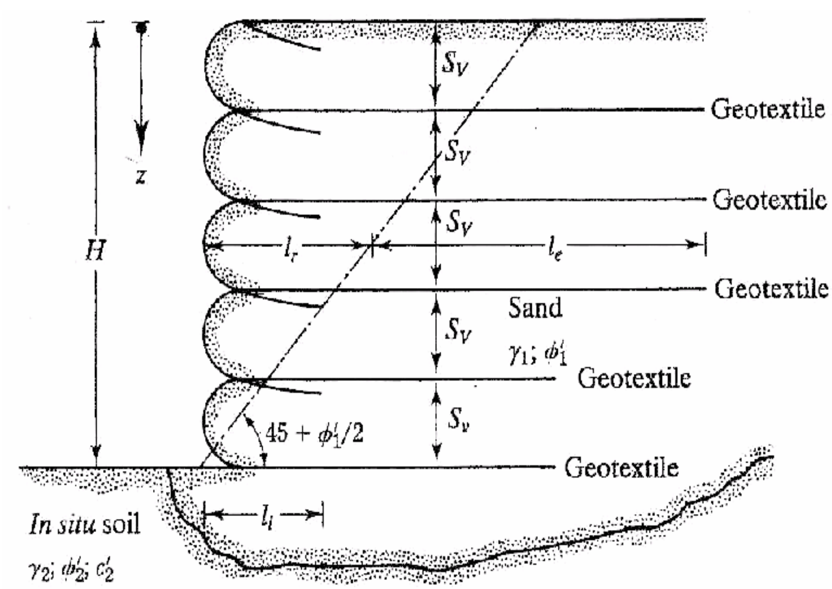

Fig. 4.9 Details of Geotextile Reinforced Retaining Wall

4.9 SUMMARY

In this chapter reinforced earth retaining wall is discussed in detail. Design principles of reinforced earth retaining wall are studied. Retaining wall is designed by two types of reinforcement i.e. metallic strip reinforcement and geotextile.

5. REINFORCED EARTH SLOPES

5.1 GENERAL

Slopes may be artificial (man made) as in cuttings and embankments for highways and railroads, earth dams, temporary excavations, tips and soil heaps, landscaping operations for development of sites etc. Slopes may also be natural as in hillside and valleys, coastal and river cliffs and so on. In all these cases, forces exist which tend to cause the soil to move from high points to low points. In other words, these exists an inherent tendency in the slopes to assume a more stable configuration. If there is only the tendency to move, it can be considered as instability. If actual movement of soil mass occurs, it is a slope failure.

When slopes do not have sufficient stability, engineers turn to various methods of slope stabilization. Slopes can be economically stabilized and many methods are available. Various methods of slope stabilization are unloading, buttressing, structural stabilization such as provide retaining walls or tieback anchors, provide surface drainage, provide soil reinforcement (such as galvanized metal strip, geosynthetics), vegetation etc.

Another important factor is the engineer's ability to increase usable property economically in all segments of property development. Increasingly, residential, commercial and industrial developers as well as transportation and infrastructure facilities designers are faced with the challenge of maximizing land use in areas that often have both difficult topographic characteristics as well as difficult soil conditions.

The illustrations on Fig. 5.1 clearly indicate the advantage of steep reinforced slopes in increasing the usable land for change-of-grade applications. In addition, the additional cost associated with the design and construction of reinforced steep slopes is far less than the costs associated with comparable alternates (i.e., cast-in-place concrete walls, soldier piles and lagging, soil nailing, etc.). For reinforced steepened slopes, the reinforcement works with the compacted soil to create a stable mass that has enhanced geotechnical properties. Thus, slopes with surface inclinations greater than the natural angle of repose of the soil, can be constructed. This feature can lead to many interesting benefits such as creating usable space at the top or toe of the slope, significantly reducing the amount of fill required to construct the slope and, as mentioned earlier, eliminating the expense of costly facing elements.

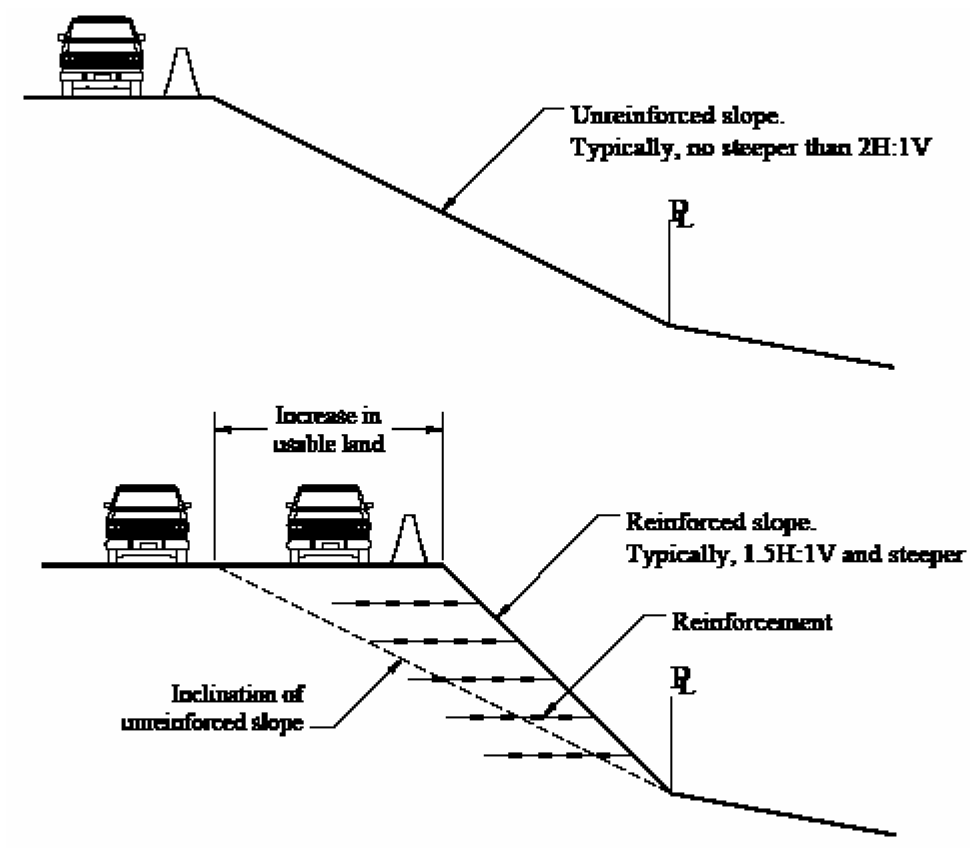

Fig. 5.1 Available Land for Unreinforced Vs Reinforced Slope

5.2 CONCEPT OF REINFORCED EARTH SLOPE

A reinforced soil slope is defined as a compacted fill embankment that incorporates the use of horizontally placed reinforcement to enhance the stability of the soil structure. Reinforced Soil Slopes (RSS) consist of tensile reinforcements in soil backfill allowing the slope to be constructed steeper than without the reinforcement. Depending on the materials used, the slope inclinations can be constructed up to 70 degrees from the horizontal. Primary reinforcing elements provide overall stability, while secondary (shorter) reinforcing elements are used to provide near face stability. Typically, various types of slope facing such as erosion control blankets, geogrids, gabions, or shotcrete are used to prevent near surface erosion and raveling, especially for steep slopes.

All Reinforced Soil Slopes must be designed for external stability such as sliding and deep seated, local bearing capacity failure, and excessive settlement from both short-term and long-term conditions. Reinforcement requirements must be designed to adequately account for the internal stability of the slope. Mechanically Stabilized Earth (MSE) walls and Reinforced Soil Slopes (RSS) – Design and Construction Guidelines (FHWA-NHI-00-043) provide detailed design procedures for reinforced soil slopes. The design concepts are similar to MSE walls.

Reinforced Soil Slope is relatively easy to construct, and have a lower cost relative to MSE walls. Proper drainage is needed behind the reinforced mass to prevent development of hydrostatic pressures. Design of reinforced slopes requires that sufficient width be provided to install reinforcing elements. In road rehabilitation projects, construction of the required backfill zone could impact the travel lanes or may necessitate acquiring additional right-of-way. Reinforced soil slopes have a number of advantages including:

- Requiring less fill material and having a smaller overall footprint, which can reduce right-of-way acquisition and environmental impacts in sensitive areas.
- Often allowing, onsite materials to be used for construction.

- Assisting growth of vegetation on slope face for a more environmentally acceptable appearance.

5.3 COMPONENTS OF REINFORCED EARTH SLOPE SYSTEM

Where limited right of way is available and the cost of a MSE wall is high, a steepened slope system should be considered. In this chapter the background and design requirements for evaluating a reinforced soil slope (RSS) alternative are reviewed.

Reinforced Soil Slope System: Reinforced soil systems consist of planar reinforcements arranged in nearly horizontal planes in the backfill to resist outward movement of the reinforced fill mass (see Fig. 5.2). Facing treatments ranging from vegetation to flexible armor systems are applied to prevent unraveling and sloughing of the face. These systems are generic in nature and can incorporate any of a variety of reinforcements and facing systems. Design assistance is often available through many of the reinforcement suppliers, many of which have proprietary computer programs.

Reinforcement: Reinforced soil slopes can be constructed with any of the reinforcements described in chapter 1. Galvanized metal strip type reinforcing elements can also be used. A majority of the systems are constructed with continuous sheets of geosynthetics (i.e., geotextiles or geogrids) or wire mesh. Small, discrete micro reinforcing elements such as fibers, yarns, and microgrids located very close to each other have also been used.

Backfill Materials: Backfill requirements for reinforced soil slopes are same as those of reinforced earth retaining wall. Because a flexible facing (e.g. wrapped facing) is normally used, minor distortion at the face that may occur due to backfill settlement, freezing and thawing, or wetting and drying can be tolerated. Thus, lower quality backfill than recommended for MSE walls can be used. The recommended backfill is limited to low-plasticity, granular material (i.e., Plasticity Index 20 and 50 percent finer than 0.075 mm). However, with good drainage, careful evaluation of soil and soil-reinforcement interaction characteristics, field construction control, and performance monitoring most indigenous soil can be considered.

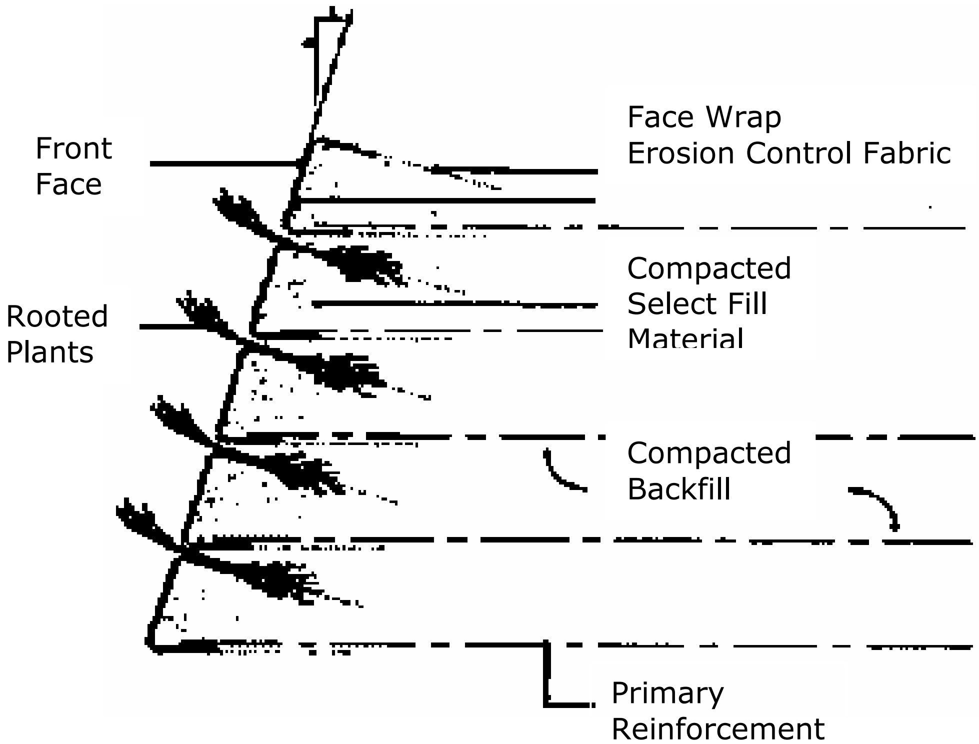

Fig. 5.2 Components of Vegetated Reinforced Soil Slope System

Vegetation: Appropriate vegetation is an important part of most slope stabilization plans. It provides erosion protection, draws water out of the ground, provides some reinforcement of the soil, and has important aesthetic value. Although vegetation has virtually no effect on deep seated slides, it can be very helpful in preventing shallow slides, slumps and flows. In arid and semi arid areas, it is often necessary to install irrigation systems to establish and maintain the desired vegetation. These systems must be closely monitored, because excessive irrigation can introduce large quantities of water in to the ground and create serious stability problems.

The vegetation used in the Reinforced Soil System is typically in the form of live woody branch cuttings from species that root adventitiously or from, bare root and/or container plants. Plant materials may be selected for a variety of tolerances including: drought, salt, flooding, fire, deposition, and shade.

They may be chosen for their environmental wildlife value, water cleansing capabilities, flower, branch and leaf color or fruits. Other interests for selection may include size, form, rate of growth rooting characteristics and ease of propagation. Time of year for construction of a VRSS system also plays a critical roll in plant selection.

5.4 CONSTRUCTION OF THE REINFORCED EARTH SLOPE

As the reinforcement layers are easily incorporated between the compacted lifts of fill, construction of reinforced slopes is very similar to normal slope construction. The elements of construction consist of simply:

1. Placing the soil.
2. Placing the reinforcement.
3. Constructing the face.

The following is the usual construction sequence as shown in Fig. 5.3:

1. Site Preparation:

   - Clear and grub site.
   - Remove all slide debris (for slope reinstatement projects).
   - Prepare a level subgrade for placement of the first level of reinforcement.
   - Proof-roll subgrade at the base of the slope with a roller or rubber-tired vehicle.
   - Observe and approve foundation prior to fill placement.

2. Reinforcing Layer Placement:

    - Reinforcement should be placed with the principal strength direction perpendicular to the face of the slope.
    - Secure reinforcement with retaining pins to prevent movement during fill placement.
    - A minimum overlap of 150 mm is recommended along the edges perpendicular to the slope for wrapped face structures. Alternatively, with geogrid reinforcement, the edges may be clipped or tied together. When geosynthetics are not required for face support, no overlap is required and edges should be butted.

3. Reinforcement Backfill Placement:

    - Place fill to the required lift thickness on the reinforcement using a front end loader or dozer operating on previously placed fill or natural ground.
    - Maintain a minimum of 150 mm of fill between the reinforcement and the wheels or tracks of construction equipment.
    - Compact with a vibratory roller or plate type compactor for granular materials or a rubber-tired or smooth drum roller for cohesive materials.
    - When placing and compacting the backfill material, care should be taken to avoid any deformation or movement of the reinforcement.
    - Use lightweight compaction equipment near the slope face to help maintain face alignment.

4. Compaction Control:

    - Provide close control on the water content and density of the backfill. It should be compacted to at least 95 percent of the standard AASHTO T99 maximum density within 2 percent of optimum moisture.

- If the backfill is a coarse aggregate, then a relative density or a method type compaction specification should be used.

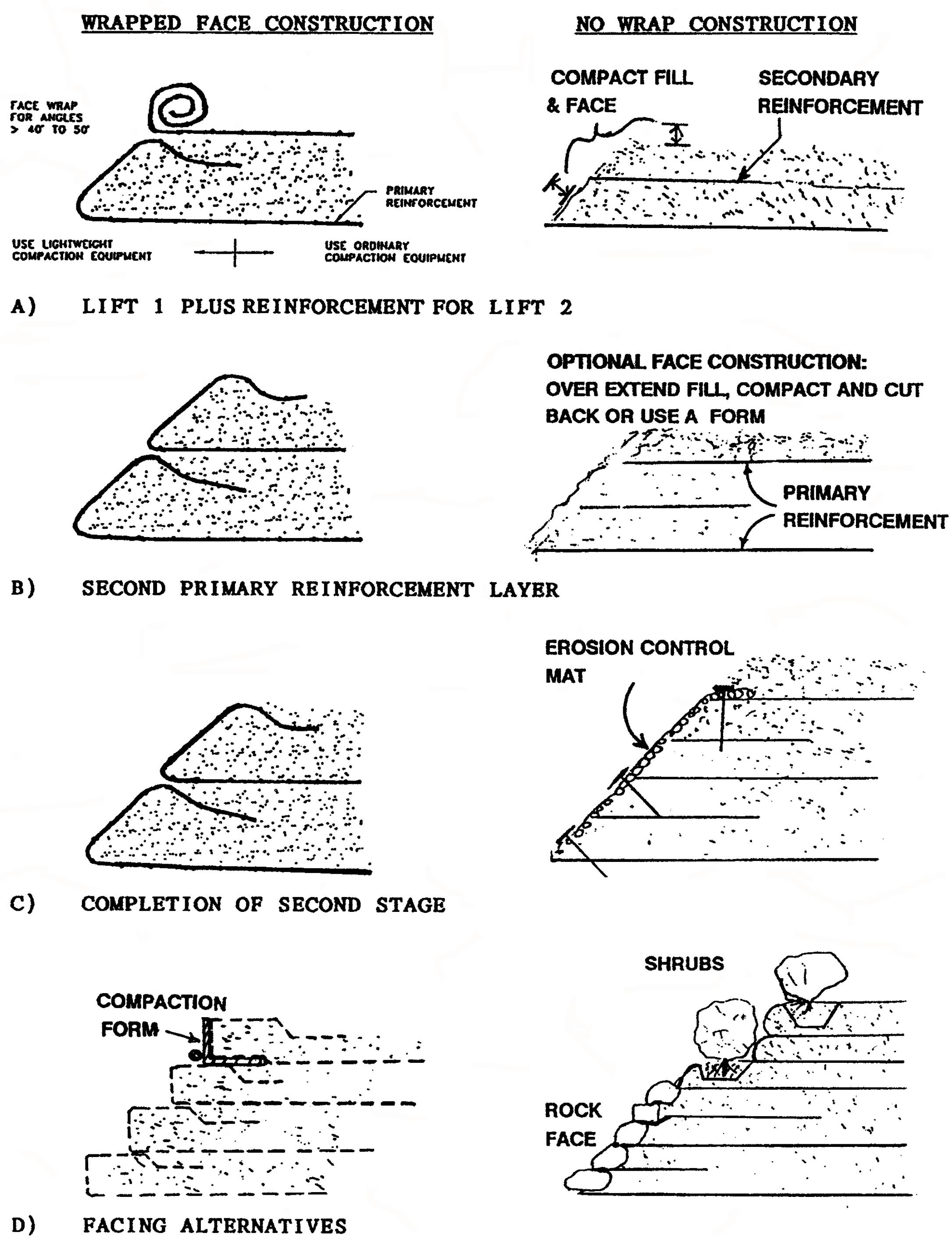

Fig. 5.3 Construction of the Reinforced Earth Slope

5. Face Construction:

Slope facing requirements will depend on soil type, slope angle and the reinforcement Spacing.

If slope facing is required to prevent sloughing (i.e., slope angle β is greater than φsoil) or erosion, several options are available. Sufficient reinforcement lengths could be provided for wrapped faced structures. A face wrap may not be required for slopes up to 1H:1V as indicated in Fig. 5.3. In this case, the reinforcement can be simply extended to the face.

For this option, a facing treatment as detailed under Treatment of Outward Face should be applied at sufficient intervals during construction to prevent face erosion. For wrapped or no wrap construction, the reinforcement should be maintained at close spacing (i.e., every lift or every other lift but no greater than 400 mm). For armored, hard faced systems the maximum spacing should be no greater than 800 mm. A positive frictional or mechanical connection should be provided between the reinforcement and armored type facing systems.

The following procedures are recommended for wrapping the face:

- Turn up reinforcement at the face of the slope and return the reinforcement a minimum of 1 m into the embankment below the next reinforcement layer (see Fig. 5.3).
- For steep slopes, form work may be required to support the face during construction, especially if lift thickness of 450 to 600 mm or greater are used.
- For geogrids, a fine mesh screen or geotextile may be required at the face to retain backfill materials.

Slopes steeper than approximately 1:1 typically require facing support during construction. Exact slope angles will vary with soil types, i.e., amount of cohesion. Removable facing supports (e.g., wooden forms) or left-in-place welded wire mesh forms are typically used. Facing support may also serve as permanent or temporary erosion protection, depending on the requirements of the slope.

6. Treatment of the Outward Face: following methods are available for the treatment of the outward face of the reinforced soil slope:

    - Grass Type Vegetation
    - Soil Bioengineering (Woody Vegetation)
    - Armored (permanent facing): A permanent facing such as gunite or emulsified asphalt may be applied to a Reinforced Soil Slope face to provide long-term ultra-violet protection, if the geosynthetic UV resistance is not adequate for the life of the structure. Welded wire mesh or gabions may also be used to facilitate face construction and provide permanent facing systems.

5.5 FAILURE MODES OF REINFORCED EARTH SLOPE

The design process must address all possible failure modes that a reinforced (or unreinforced) slope will potentially experience. The design process must address:

- Internal stability for the condition where the failure plane crosses the reinforcement as shown in the Fig. 5.4.

- External stability for the condition where the failure plane is located outside and below the reinforced soil mass as shown in the Fig. 5.4.

- Compound stability for the condition where the failure plane passes behind and through the reinforced soil mass as shown in the Fig 5.4.

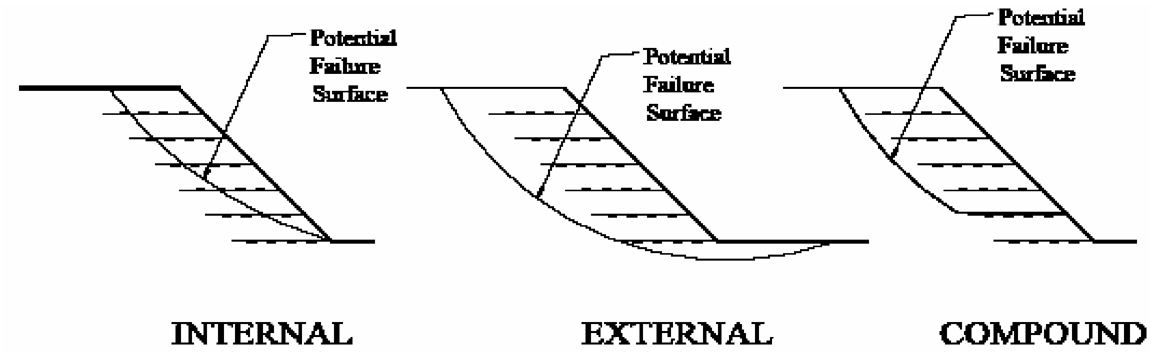

Fig. 5.4 Failure Modes of Reinforced Earth Slopes

In some cases, the calculated stability safety factor can be approximately equal in two or all three modes, if the reinforcement strengths, lengths and vertical spacing are optimized.

5.5.1 Evaluation of External Stability of the Reinforced Soil Slope

The external stability of a reinforced soil mass depends on the ability of the mass to act as a stable block and withstand all external loads without failure. Failure possibilities as shown in Fig. 5.5 include sliding, deep-seated overall instability, local bearing capacity failure at the toe (lateral squeeze type failure), as well as excessive settlement from both short- and long-term conditions.

a) Sliding Instability   b) Deep Seated Overall Instability

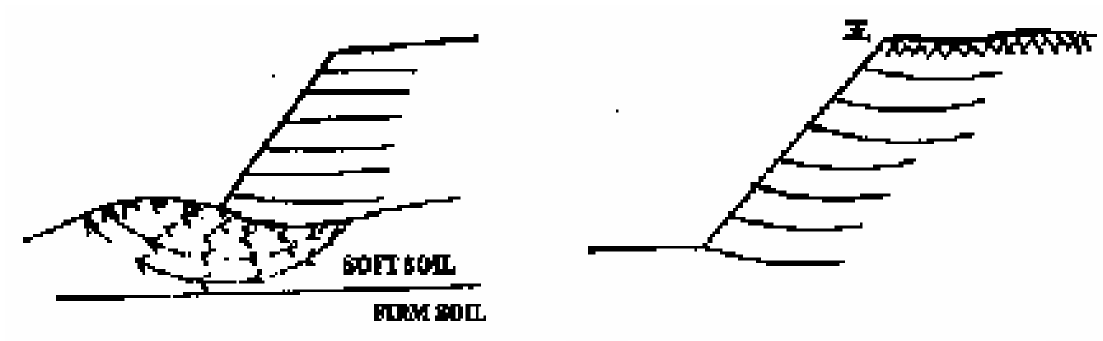

c) Local Bearing Capacity Failure d) Excessive Settlement

Fig. 5.5 External Failure Modes for Reinforced Earth Slopes

If any of the external stability safety factors are less than the required factor of safety, the following foundation improvement options could be considered:

- Excavate and replace soft soil.
- Flatten the slope.
- Construct a berm at the toe of the slope to provide an equivalent flattened slope. The berm could be placed as a surcharge at the toe and removed after consolidation of the soil has occurred.
- Stage constructs the slope to allow time for consolidation and improvement of the foundation soils.
- Embed the slope below grade (>1 m), or construct a shear key at the toe of the slope (evaluate based on active-passive resistance).
- Use ground improvement techniques (e.g., wick drains, stone columns, etc.).

5.6 DESIGN OF THE REINFORCED EARTH SLOPES

5.6.1 Design Considerations

There are two main purposes for using reinforcement in slopes as follows:

- Improved stability for steepened slopes and slope repair.

- Compaction aids, for support of construction equipment and improved face stability.

The design of reinforcement for safe, steep slopes requires a rigorous analysis. The design of reinforcement for this application is critical, as failure of the reinforcement would result in failure of the slope.

The overall design requirements for reinforced slopes are similar to those for unreinforced slopes. The factor of safety must be adequate for both the short-term and long-term conditions and for all possible modes of failure as discussed earlier.

For steepened reinforced slopes (face inclination up to 70 degrees), design is based on modified versions of the classical limit equilibrium slope stability methods or simple wedge methods.

5.6.2 Simple Wedge Method

This method was developed by Schmertmann et al. in the early 1987. Design charts were developed based upon simplified analysis methods of two-part and one-part wedge-type failure surfaces. Following assumptions were made by the schmertmann for the slope stability analysis.

- Extensible reinforcement elements are used.
- Slopes are constructed with uniform, cohesion less soil.
- No pore pressures within the slope.
- No seismic loading.
- Competent level foundations.
- Flat slope face and horizontal slope crest.
- Uniform surcharge load at top of slope.
- Horizontal reinforcement layers with coefficient of interaction (*Ci*) equal to 0.9.

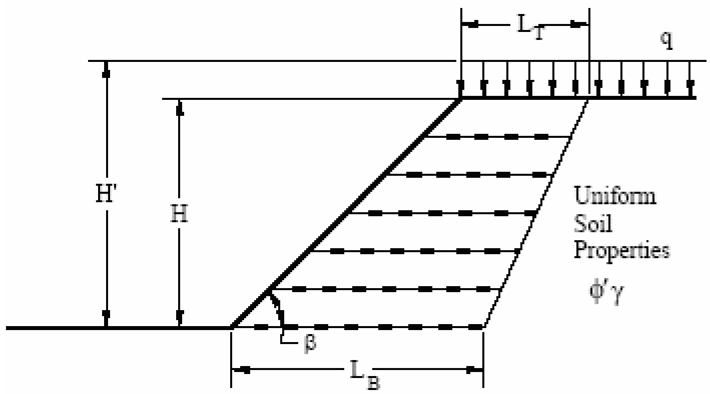

Fig. 5.6 Slope Geometry and Definitions

In Fig. 5.6,

H = Slope Height

H′ = Modified Slope Height

q = Uniform Surcharge on top of Slope

β = Slope Angle (deg.)

Φ′ = Effective Soil Friction Angle (deg.)

γ = Moist Unit Weight of Soil

L_B = Reinforcement Length at Base of Slope

L_T = Reinforcement Length at Top of Slope

5.6.3 Design Procedure for Geogrid Reinforced Earth Slopes

1. Determine the modified height of the slope from the following equation.

$$H' = H + \frac{q}{\gamma} \qquad \text{... (5.1)}$$

2. Calculate the factored soil friction angle with taken in to the account the factor of safety.

$$\phi_f' = \tan^{-1}\left(\frac{\tan\phi'}{F.O.S}\right) \qquad \text{... (5.2)}$$

3. Obtain reinforcement force coefficient (K) from the chart 67 (a) of the FHWA-NHI-00-043 as shown below fig. 5.7.

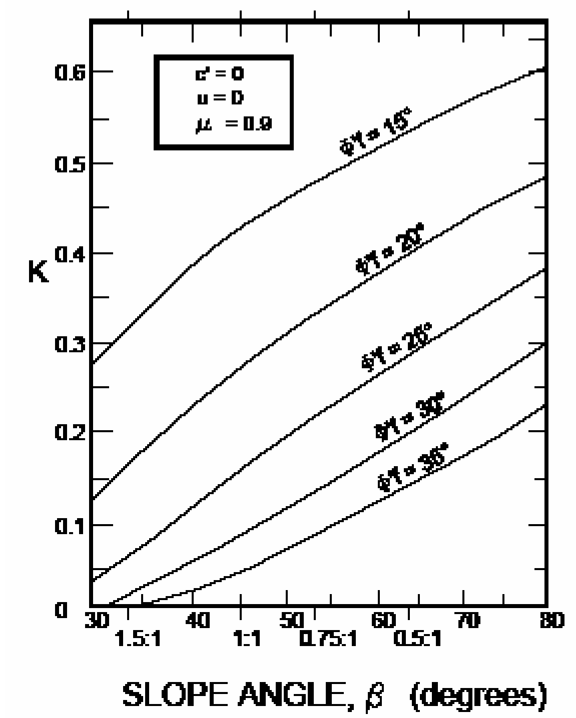

Fig. 5.7 Reinforcement Coefficient (K)

4. Calculate the total force in the geogrid from the following equation.

$$T_{max} = 0.5 \times K \times \gamma \times (H')^2 \quad \text{... (5.3)}$$

5. Select the geogrid design strength and calculate the number of geogrid layers. To determine the appropriate geogrid, calculate the long-term design strength (LTDS) of the material as follows.

$$LTDS = \frac{T_{ult}}{RF_{CR} \times RF_{ID} \times RF_{D}} \quad \text{... (5.4)}$$

Where, T_{ult} = Ultimate tensile strength of the reinforcement

RF_{CR} = reduction factor due to creep

RF_{ID} = reduction factor due to installation damage

RF_{D} = reduction factor due to durability

All these factors are provided by the manufacturer of the geogrid.

The minimum number of geogrid layers for the reinforced section, is then calculated as follows assuming 100% coverage of the geogrid for a given vertical elevation.

$$N = \frac{T_{max}}{LTDS} \qquad \text{... (5.5)}$$

Vertical Spacing of the reinforcement: $S_V = \frac{H}{N}$ ... (5.6)

Where, N = no. of geogrid layers

T_{max} = total force in the geogrid

6. Obtain length ratios from the chart 67 (b) of FHWA-NHI-00-043 as shown in Fig. 5.8 and calculate the length of the geogrid.

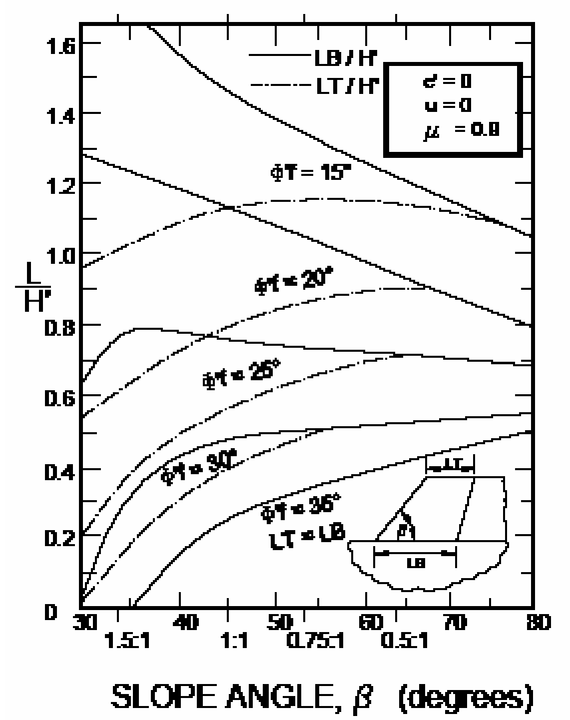

Fig. 5.8 Reinforcement Length Ratios, L_T and L_B.

7. Draw the final section of the Reinforced Soil Steep Slope.

5.7 DESIGN EXAMPLE

5.7.1 Design of the Reinforced Earth Slope

Aim: To find out the appropriate reinforcement for reinforced slope (see Fig. 5.9) with an overall factor of safety (F.O.S) = 1.5

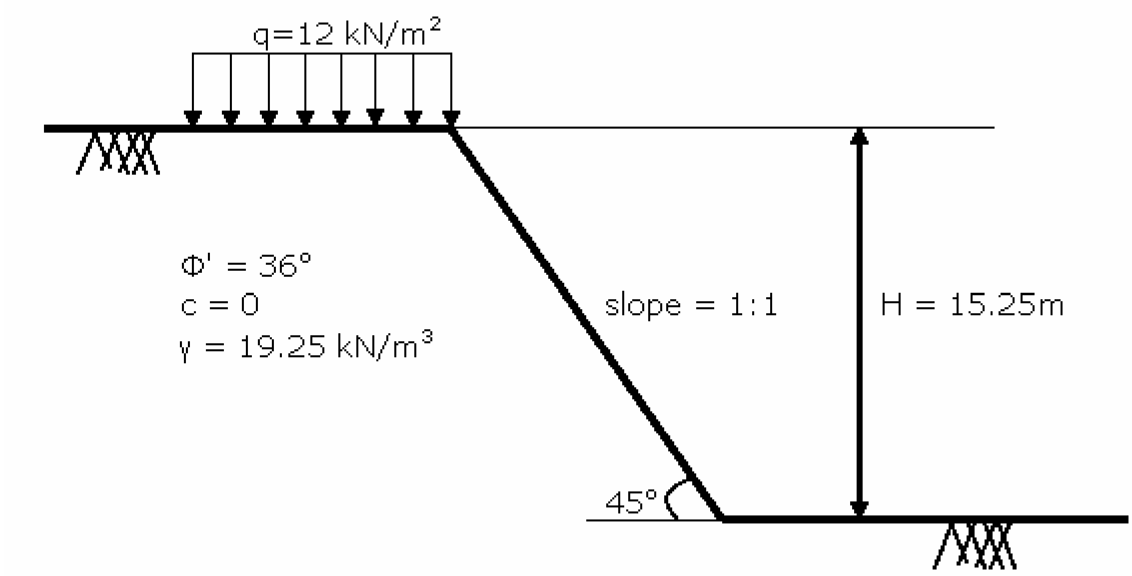

Fig. 5.9 Section of the Slope

Data:

Height of the Slope (H) =	15.25 m
Uniform Surcharge on Slope (q) =	12 kN/m^2
Density of the backfill (γ) =	19.25 kN/m^3
Angle of friction (Φ') =	36^o
Angle of slope (β) =	45^o

Design:

A) Determine the equivalent height of the slope (H'):

$$H' = H + \frac{q}{\gamma}$$

H' = 15.25 + 12/19.25

H' = 15.873 m

B) Calculate the factored soil friction angle (Φ_f'):

$$\phi_f' = \tan^{-1}\left(\frac{\tan\phi'}{F.O.S}\right)$$

$$\phi_f' = \tan^{-1}\left(\frac{\tan 36^0}{1.5}\right)$$

$\Phi_f' = 25.84^0$

C) Obtain value of the reinforcement coefficient (K) from chart as shown below Fig. 5.10

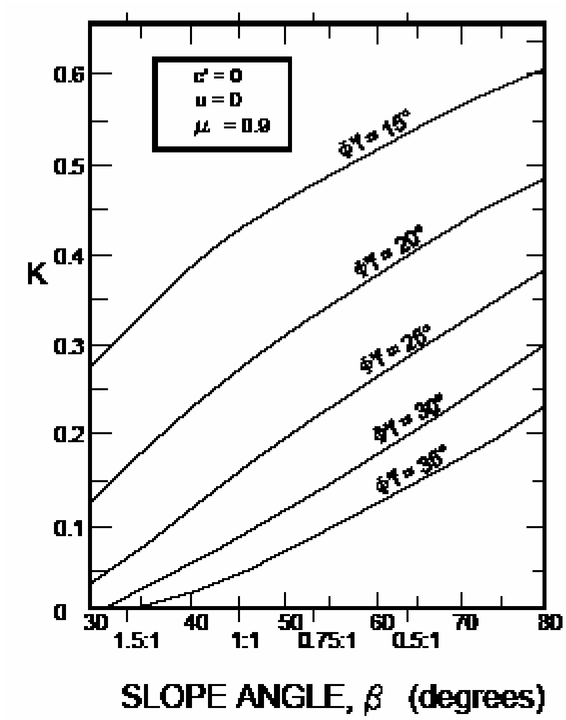

Fig. 5.10 Reinforcement Coefficient (K)

for $\beta = 45^\circ$ and $\Phi_f' = 25.84^\circ$

$K = 0.15$

D) Calculate the total force in the reinforcement (T_{max}):

$$T_{max} = 0.5 x K x \gamma x (H')^2$$

$T_{max} = 0.5x0.15x19.25x(15.87)^2$

$T_{max} = 363.77$ kN/m

Because of the considerable height of the slope, it is desirable to provide geogrid in three different layers to maximize the efficiency of the design.

Divide the slope in to three zones (Fig. 5.11) and provide following tensile force distribution factor which are given in the FHWA-NHI-00-043.

$T_{bottom} = 0.5xT_{max}$

$T_{bottom} = 181.89$ kN/m

$T_{middle} = 0.33xT_{max}$

$T_{middle} = 120.05$ kN/m

$T_{top} = 0.17xT_{max}$

$T_{top} = 61.84$ kN/m

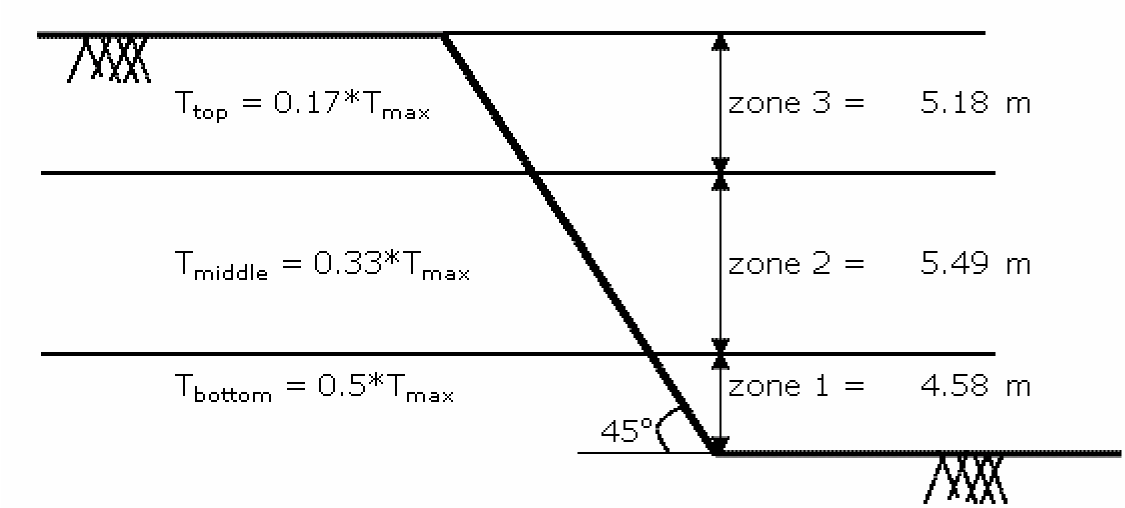

Fig. 5.11 Distribution of the Tensile Force

Zone 1:

Use a geogrid with ultimate tensile strength T_{ult} = 84 kN/m

Reduction factor due to creep RF_{CR} = 1.61

Reduction factor due to installtion damage RF_{ID} = 1.10

Reduction factor due to durability RF_D = 1.10

Long Term Design Strength of the Geogrid (LTDS):

$$LTDS = \frac{T_{ult}}{RF_{CR}xRF_{ID}xRF_D}$$

LTDS = 43.12 kN/m

Required Nos. of layers of geogrid (N):

$$N = \frac{T_{max}}{LTDS}$$

N = 4.22 ≈ 5 layers

Provide 5 layers of geogrid.

Vertical Spacing of the geogrid (S_V):

$$S_V = \frac{H}{N} = 4.58/5 = 0.916 \approx 1 \text{ m}$$

Zone 2:

Use a geogrid with ultimate tensile strength T_{ult} = 63.5 kN/m

Reduction factor due to creep RF_{CR} = 1.61

Reduction factor due to installtion damage RF_{ID} = 1.10

Reduction factor due to durability RF_D = 1.10

Long Term Design Strength of the Geogrid (LTDS):

$$LTDS = \frac{T_{ult}}{RF_{CR} x RF_{ID} x RF_D}$$

LTDS = 32.60 kN/m

Required Nos. of layers of geogrid (N):

$$N = \frac{T_{max}}{LTDS}$$

N = 3.68 ≈ 4 layers

Provide 4 layers of the geogrid.

Vertical Spacing of the geogrid (S_V):

$$S_V = \frac{H}{N} = 5.49/4 = 1.37 \text{ m}$$

Zone 3:

Use a geogrid with ultimate tensile strength T_{ult} = 47 kN/m

Reduction factor due to creep RF_{CR} = 1.61

Reduction factor due to installtion damage RF_{ID} = 1.10

Reduction factor due to durability RF_D = 1.10

Long Term Design Strength of the Geogrid (LTDS):

$$LTDS = \frac{T_{ult}}{RF_{CR} x RF_{ID} x RF_D}$$

LTDS = 24.13 kN/m

Required Nos. of layers of geogrid (N):

$$N = \frac{T_{max}}{LTDS}$$

N = 2.56 ≈ 3 layers

Provide 3 layers of the geogrid.

Vertical Spacing of the geogrid (S_V):

$$S_V = \frac{H}{N} = 5.18/3 = 1.73 \text{ m}$$

E) Obtain length ratios and calculate length of geogrid from chart as shown Fig. 5.12:

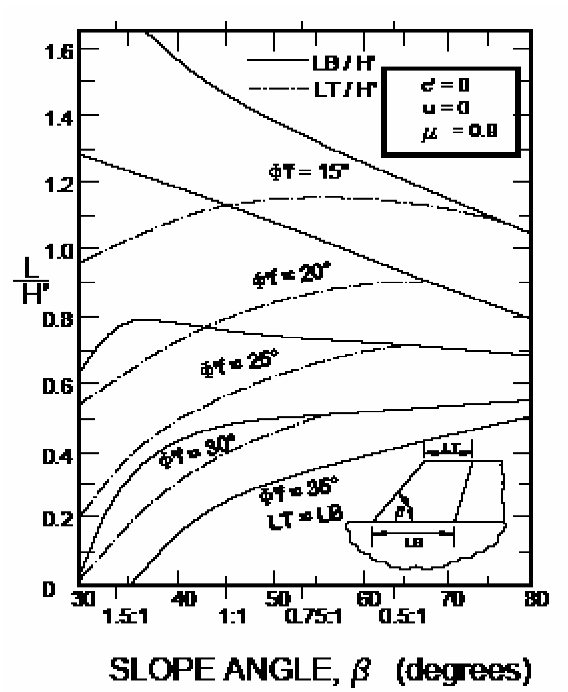

Fig. 5.12 Reinforcement Length Ratios

for β = 45° and Φ_f' = 25.8°

L_T/H' = 0.55 and L_B/H' = 0.76

L_T = 0.55xH' = 0.55x15.87 = 8.73 m

L_B = 0.76xH' = 0.76x15.87 = 12.06 m

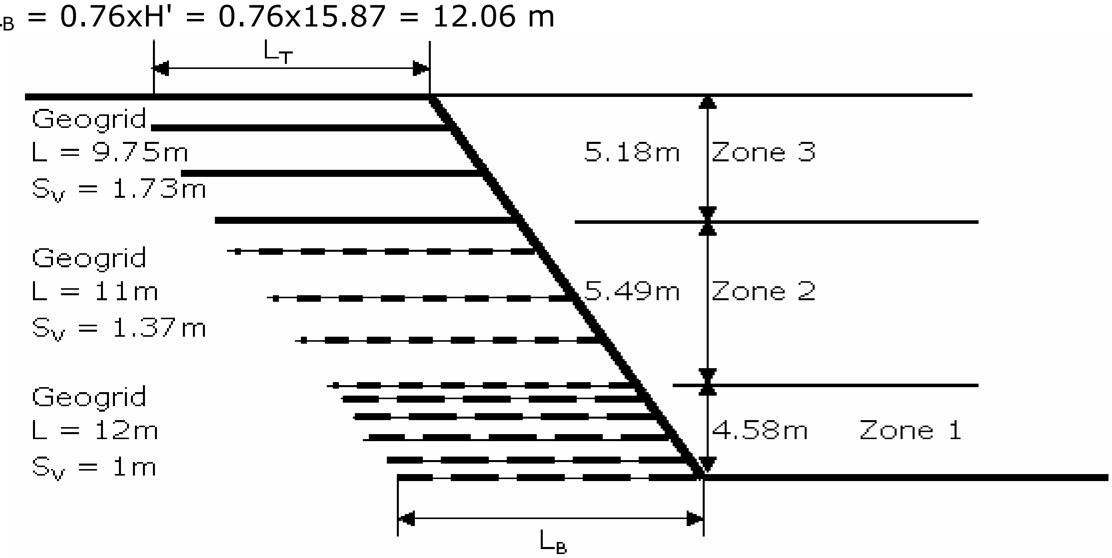

Fig. 5.13 Final Section of the Reinforced Earth Slope

5.8 SUMMARY

Reinforced earth slope is discussed in this chapter. Construction aspects and failure modes of the reinforced earth slope is discussed. Design principles of reinforced earth slope with respect to FHWA-NHI-00-043 are also discussed. Reinforced earth slope is designed with geogrid reinforcement.

6. REINFORCED EARTH ABUTMENT

6.1 GENERAL

Conventional bridges are commonly supported by rigid substructures. These substructures are usually designed as cast-in-place reinforced concrete supported either on concrete spread footings or on pile foundation. Reinforced earth bridge abutments however, support the superstructure directly using a concrete bearing seat which rests on the reinforced earth mass.

The primary technical reason to select Reinforced Earth for a bridge abutment relates to its ability to withstand post construction settlement without structural distress. There are two major advantages:

- Abutments can be built on compressible foundations without resorting to deep foundations.
- Abutments and approach fills settle together eliminating the characteristic "bump at the end of the bridge".

Early in the development of Reinforced Earth it became clear that bridge abutments were an application where owners could reap, the benefits of the performance and economy of mechanically stabilized earth structures.

In 1972, the first major reinforced earth abutment was built at Thionville over the Moselle river to support the 38m end span of a continuous concrete bridge structure. Since then many reinforced earth abutments have been constructed throughout the world.

A bridge abutment has both retaining and load bearing functions. The effect of increased load on a reinforced earth structure is to mobilize more effectively the internal resistance of the structure itself. The use of reinforced earth as a bridge abutment is therefore a logical application of the technique and it has many practical and technical benefits for bridge construction including simplicity, economy and flexibility.

6.2 ADVANTAGES OF THE REINFORCED EARTH ABUTMENT

Following are the major advantages of the reinforced earth abutment over traditional rigid abutment:

1. Economical: The construction cost of the abutment is reduced because of elimination of the costly piles and also less concrete quantity is required because mostly there is a mass of the reinforced earth.
2. Flexibility: The reinforced earth bridge abutment is the more flexible wall system than rigid bridge abutment of reinforced concrete.
    - The performance of the reinforced earth bridge abutment is better against seismic forces than traditional abutment.
    - Reinforced earth bridge abutment gives the excellent performance on the soft soil.
    - Reinforced earth bridge abutment is able to withstand severe post construction settlement.
3. Reinforced earth bridge abutment eliminates the bump behind the bridge.

6.3 TYPES OF REINFORCED EARTH ABUTMENT

There are two types of bridge abutments associated with reinforced earth walls. Following are the two types of reinforced earth bridge abutments:

1. True reinforced earth bridge abutment.
2. Mixed reinforced earth bridge abutment.

1. True Reinforced Earth Bridge Abutment: In a true bridge abutment, the bridge beams are supported on a spread footing bearing directly on the reinforced earth mass as shown Fig. 6.1(a). To prevent overstressing the soil of a true abutment, the beam seat is sized so the centerline of

bearing is at least 1m behind the reinforced earth wall face and the bearing pressure on the reinforced soil is no more than 40kN/m^2. The bearing stresses beneath the seat are distributed into the reinforced soil, so soil reinforcement density is higher near the top of the structure and decreases with depth as the bearing stresses dissipate.

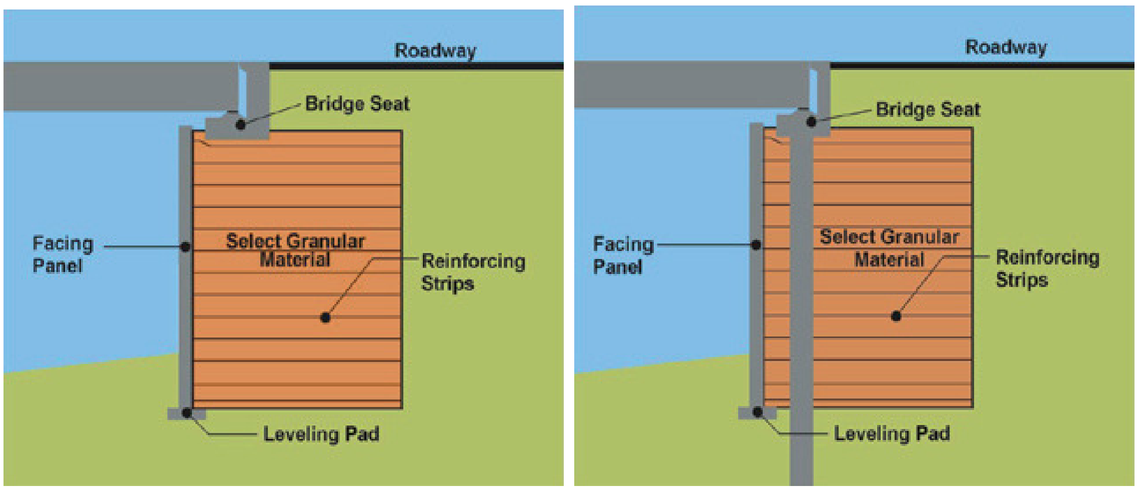

a) True Bridge Abutment b) Mixed Bridge Abutment

Fig. 6.1 Types of Reinforced Earth Bridge Abutment

2. Mixed Reinforced Earth Bridge Abutment: A mixed bridge abutment, by comparison, has piles supporting the bridge seat Fig. 6.1(b), with the reinforced earth walls retaining the fill beneath and adjacent to the end of the bridge. In some cases a portion of the lateral load on the pile-supported seat is transmitted to the reinforced earth fill. This load can be resisted by MSE reinforcements in the wall or by reinforcements extending from the back wall of the seat.

6.4 CONSTRUCTION OF THE REINFORCED EARTH ABUTMENT

Earthwork construction control for reinforced earth bridge abutments is essentially the same as that required for conventional bridge abutments, but with a few additional details that require special attention. Following are major steps of the construction of the reinforced earth bridge abutments (see Fig. 6.2):

1. Site preparation.
2. Placement of the reinforcement.
3. Placement of the backfill.
4. Facing panel construction.
5. Drainage.

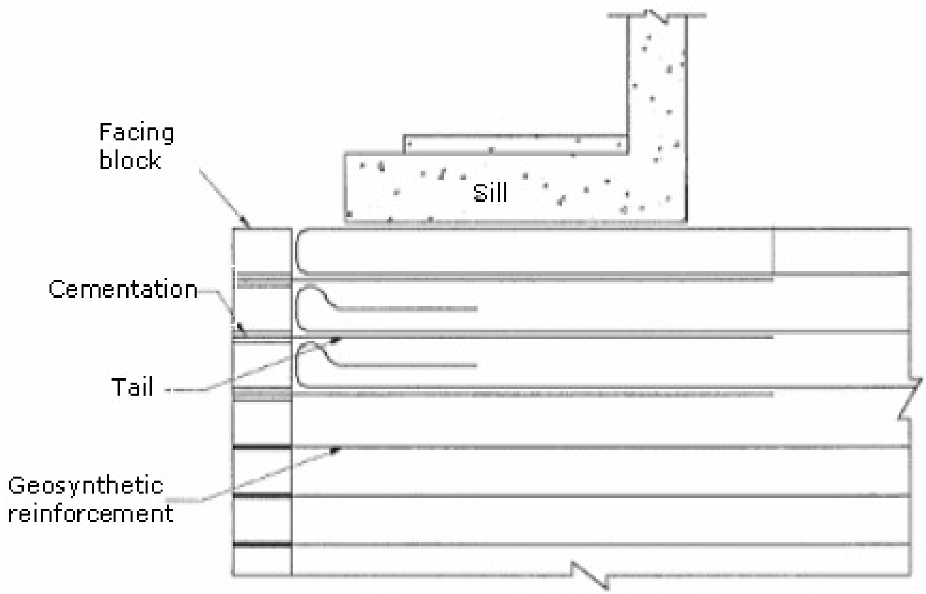

Fig. 6.2 Construction of the Reinforced Earth Bridge Abutment

1. Site preparation:

- Before placement of the reinforcement, the ground should be graded to provide a smooth, fairly level surface.
- The surface should be clear of vegetation, large rocks, stumps, and the like. Depressions may need to be filled; soft spots may need to be excavated and replaced with backfill material; and the site may need to be proof rolled.
- If the foundation contains frost-susceptible soil, it should be excavated to at least the maximum frost penetration line and replaced with non-frost-susceptible soil.
- If the foundation is only marginally competent, the top 1 m of the foundation should be excavated and replaced with a reinforced soil foundation.

- For abutment walls less than 10 m high, unless the ground surface is level and the foundation soil is stiff, a leveling pad should be constructed under the first course of the facing blocks. The leveling pad should be a compacted road base material of about 150 mm thick and 450 mm wide. Compaction of the leveling pad should be performed using a light-compactor to obtain a minimum of 95 percent of the maximum standard Proctor density (as per ASTM D698).
- In a stream environment, reinforced earth abutments should be protected from possible scour and abrasion by using riprap or other protection measures.

2. Placement of the Reinforcement:

- Geosynthetic reinforcement should consist of high-tenacity geogrids or geotextiles manufactured for soil reinforcement applications. Geosynthetics, especially geotextiles, should not be exposed to sunlight and extreme temperatures for an extended period of time. Damaged or improperly handled geosynthetic reinforcement should be rejected.
- Geosynthetic reinforcement should be installed under tension. A nominal tension shall be applied to the reinforcement and maintained by staples, stakes, or hand tensioning until the reinforcement has been covered by at least 150 mm of soil fill.
- The geosynthetic reinforcement perpendicular to the wall face should consist of one continuous piece of material. Overlap of reinforcement in the design strength direction is not permitted. Adjacent sections of geosynthetic reinforcement should be placed so as to ensure that horizontal coverage shown on the plans is provided.
- Tracked construction equipment shall not be operated directly on the geosynthetic reinforcement. A minimum backfill thickness of 150 mm is required before operation of tracked vehicles over the geosynthetic reinforcement. Turning of tracked vehicles should be kept to a minimum to prevent displacing the fill and damaging or moving the geosynthetic reinforcement.

- At any elevations where the facing is "rigid," such as behind a rigid facing upper wall or the top two to three courses of the lower wall where the segmental facing blocks are interconnected, geosynthetic reinforcement should be wrapped at the wall face. The wrapped face will help reduce sloughing of fill caused by precipitation and the "gaps" that may form because of movement of the wall face. In the upper wall, the wrapped return should be extended at least 0.45 m in the horizontal direction and anchored in at least 0.1 m of fill material. The wrapped return should extend at least 1.5 m in the load-bearing wall. The added reinforcement in the load-bearing wall will increase the safety margin of its load-carrying capacity.
- It is a good practice to place a compressible layer of polystyrene sheet of about 50 mm in thickness, between the wrapped face reinforcement and the rigid abutment upper wall. Such a measure can effectively reduce lateral earth pressure and movement of the abutment wall.
- The wrapped return of geosynthetic reinforcement at the top surface of each tier (top surfaces of the upper and lower walls) should extend to the full length.
- For larger reinforcement spacing (e.g., 0.4 m or larger), it is a good practice to incorporate secondary reinforcement, of length about 1 m, between full-length reinforcement.

3. Placement of the Backfill:

- Reinforced fill should be placed as specified in construction plans in maximum compacted lift thickness of 250 mm.
- Reinforced fill should be placed and compacted at or within 2 percent dry of the optimum moisture content. If the reinforced fill is free draining (i.e., with less than 5 percent passing a No. 200 sieve), water content of the fill may be within ±3 percent of the optimum.
- For compaction of uniform medium to fine sands, use a smooth-drum static roller or lightweight (walk-behind) vibratory roller. The use of large vibratory compaction equipment with this type of backfill material will make wall alignment control difficult.

- Placement of the reinforced fill near the front should not lag behind the remainder of the structure by more than one lift.
- Backfill should be placed, spread, and compacted so as to prevent the development of wrinkles or movement of the geosynthetic reinforcement and the wall facing units.
- Special attention should be given to ensuring good compaction of the backfill, especially near the face of the wall.
- Only hand-operated compaction equipment should be allowed within 0.5 m of the front of the wall face. Compaction within 0.5 m of the back face of the facing units should be achieved by at least three passes of a lightweight mechanical tamper, plate, or roller.
- Sheepsfoot or grid-type rollers should not be used for compacting backfill within the limits of the soil reinforcement.
- Compaction control testing of the reinforced backfill should be performed regularly during the entire construction project. A minimum frequency of one test within the reinforced soil zone per 1.5 m of wall height for every 30 m of wall is recommended.
- At the end of each day's operation, the last level of backfill should be sloped away from the wall facing to direct runoff of rainwater away from the wall face. In addition, surface runoff from adjacent areas to enter the wall construction site should be avoided.

4. Facing Panel Construction:

- Masonry concrete facing should have a minimum compressive strength of 28 MPa and a water absorption limit of 5 percent.
- Facing blocks used in freeze-thaw prone areas should be tested for freeze-thaw resistance and survive 300 freeze-thaw cycles without failure.
- All facing units should be sound and free of cracks or other defects that would interfere with the proper placement of the unit or significantly impair the strength or permanence of the construction.
- Facing blocks directly exposed to spray from de-iced pavements should be sealed after erection with a water-resistant coating or be

manufactured with a coating or additive to increase freeze-thaw resistance.

- Facing blocks should be placed and supported as necessary so that their final position is vertical or battered as shown on the plans or the approved working drawings with a tolerance acceptable to the engineer.
- It is recommended that the bottom of the top two to three courses of facing blocks be bonded with cement. If lightweight blocks are used, it is recommended that the three to four courses of blocks be filled with concrete mortar and reinforced with steel bars.
- The cap block and/or top facing units should be bonded to the units below using cap adhesive that meets the requirements of the facing unit manufacturer.

5. Drainage:

- To reduce percolation of surface water into the backfill during the service life of an abutment wall, the crest should be graded to direct runoff away from the back slope. Interceptor drains on the back slope may also be used. Periodic maintenance may be necessary to minimize runoff infiltration. It is highly recommended that a combination of granular drain materials and geotextiles or a geocomposite drain be installed along the back and the base of the fill.
- Geotextile reinforcement typically provides inherent drainage function; subsurface drainage at wall face is generally not needed.

6.5 DESIGN OF THE REINFORCED EARTH ABUTMENT

6.5.1 General Considerations

There are two primary forms of stability which must be investigated in the design of the reinforced earth bridge abutment, namely A) External Stability and B) Internal Stability. In external stability analysis, it is assumed that the reinforced earth bridge abutment is an integral unit and behaves as a rigid gravity structure and conforms to the simple laws of statistics. The internal stability deals with the design of reinforcement with regard to its length, cross-section against tension failure and to its length, cross-section against tension failure and ensuring that it has sufficient anchorage length into the stable soil.

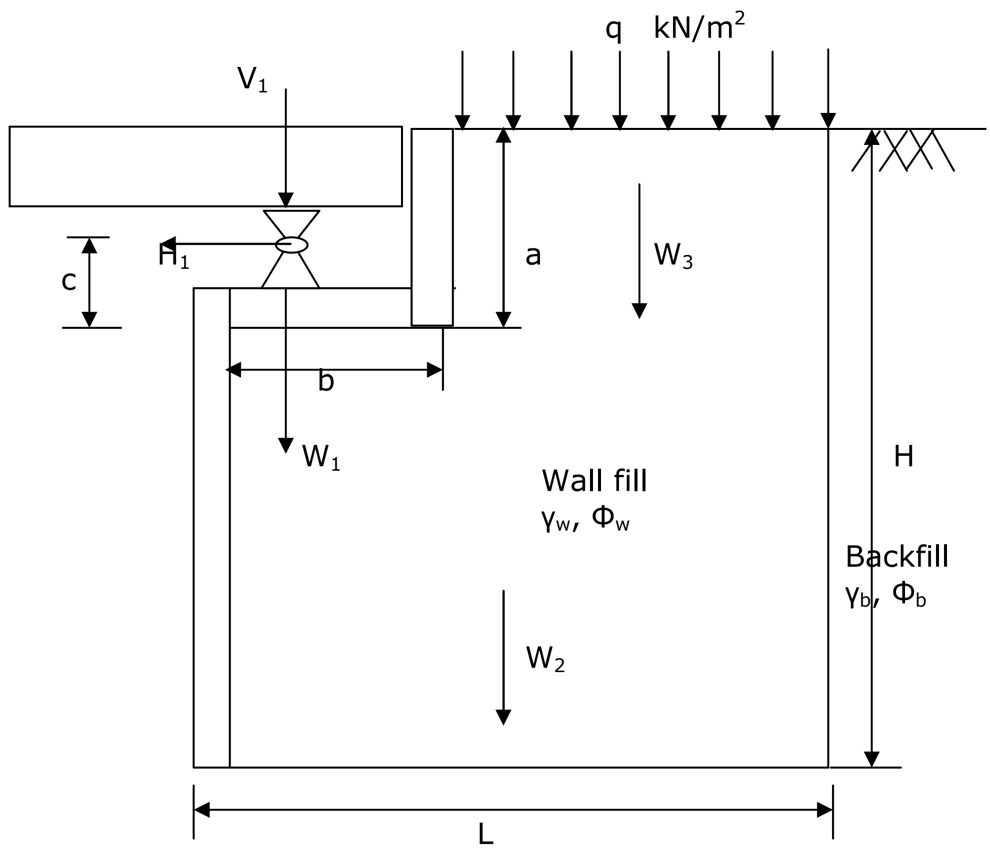

Fig. 6.3 Loads on the Reinforced Earth Bridge Abutment

Fig. 6.3 shows a trial section of reinforced earth abutment of height H reinforced with geogrid sheets having tensile strength R_T. The soil used in the body of the abutment have angle of internal friction Φ_w and unit weight γ_w. The corresponding backfill properties are Φ_b and γ_b. q Represents the surcharge intensity acting both on the abutment and backfill. V_1 and H_1 are respectively the vertical and horizontal loads coming on the abutment through bridge deck. L is the length of the reinforcement or width of the abutment. W_1, W_2 and W_3 are the self weight of the wall fill just below the bridge deck, self weight of the wall fill and self weight of the backfill.

6.5.2 Forces and Moments acting on the Abutment

The forces acting on the abutment are shown in the figure 6.3. In table 6.1 forces acting and their moment about the toe of the abutment are given:

Table 6.1 Forces and Moments acting on the Abutment

Sr. No.	Forces	Direction	Lever Arm	Moment	Direction
1.	W_1=Self Weight of Bridge Seat	↓	b/2	$M_2=W_1xb/2$	Clockwise
2.	$W_2=\gamma_w xLx(H-a)$	↓	L/2	$M_3=W_2xL/2$	Clockwise
3.	$W_3=\gamma_w x(L-b)xa$	↓	$\frac{(L-b)}{2}$	$M_4=W_3x(L-b)/2$	Clockwise
4.	$Q=qx(L-b)$	↓	(L-b)/2	$M_8=Qx(L-b)/2$	Clockwise
5.	V_1	↓	b/2	$M_1=V_1xb/2$	Clockwise
6.	H_1	←	H-(a-c)	$M_5=H_1x[H-(a-c)]$	Anti-Clockwise
7.	$P_1=k_{Ab}x\gamma_b xHxH/2$	←	H/3	$M_6=P_1xH/3$	Anti-Clockwise
8.	$P_2=k_{Ab}xqxH$	←	H/2	$M_7=P_2xH/2$	Anti-Clockwise

6.5.3 Design Procedure

The design of the reinforced earth bridge abutment should be divided in to two parts as follows:

1. External Stability.
2. Internal Stability.

A) External Stability: as discussed in the chapter-4 the possible external failure mechanism are:

1. Sliding.
2. Overturning.

3. Bearing Capacity Failure.
4. Slip failure.

Factor of Safety against Sliding:

$$F.O.S_{(sliding)} = \frac{\mu \times (V_1 + W_1 + W_2 + W_3)}{(H_1 + P_1 + P_2)} \qquad \text{... (6.1)}$$

Where,

μ = Coefficient of base friction (generally 0.5 to 0.65).

k_{Ab} = Coefficient of active earth pressure

$$K_{Ab} = \frac{1 - \sin \phi_w}{1 + \sin \phi_w} \qquad \text{... (6.2)}$$

Values of V_1, W_1, W_2, W_3, H_1, P_1 and P_2 are calculated as shown in the table 6.1.

Factor of Safety against Overturning:

$$F.O.S_{(overturning)} = \frac{M_1 + M_2 + M_3 + M_4}{M_5 + M_6 + M_7} \qquad \text{... (6.3)}$$

Values of M_1, M_2, M_3, M_4, M_5, M_6 and M_7 are calculated as shown in the table 6.1.

Total Vertical Load = V_T = $V_1+W_1+W_2+W_3+[qx(L-b)]$ ... (6.4)

Eccentricity = $e = \frac{L}{2} - \frac{M}{V_T}$ ... (6.5)

M = $[M_1+M_2+M_3+M_4+Qx(L-b)] - [M_5+M_6+M_7]$ ... (6.6)

Earth Pressure Calculation:

Maximum Earth Pressure,

$$\sigma_{max} = \frac{V_T}{L} + \frac{6xV_Txe}{L^2} \qquad \sigma_{max} < \text{Allowable Soil Pressure} \qquad \text{... (6.7)}$$

Minimum Earth Pressure,

$$\sigma_{min} = \frac{V_T}{L} - \frac{6xV_Txe}{L^2} \qquad \sigma_{min} > 0 \qquad \text{... (6.8)}$$

B) Internal Stability: the internal stability is essentially associated with the tension and wedge pull-out failure mechanisms.

The tension force T_i per m width of the reinforcement at depth h_i is given by,

$$T_i = T_{i1} + T_{i2} + T_{i3} \qquad \text{... (6.9)}$$

Where,

T_{i1} = Tension in reinforcement due to soil and surcharge.

T_{i2} = Tension in reinforcement due to vertical load (V_1).

T_{i3} = Tension in reinforcement due to horizontal load (H_1).

Tension in reinforcement due to soil and surcharge (T_{i1}):

$$T_{i1} = K_{Ab} \times \sigma_{vi} \times S_{Vi} \qquad \text{... (6.10)}$$

k_{Ab} = Coefficient of active earth pressure.

S_{Vi} = Vertical spacing of the reinforcement.

$$\sigma_{vi} = \frac{V_i}{L} + \frac{6 \times V_i \times e_i}{L^2} \qquad \text{... (6.11)}$$

$$V_i = W_1 + W_3 + Q + [\gamma_w x H x (h_i - a)] - (\gamma_b x H x b) \qquad \text{... (6.12)}$$

$$e_i = \frac{L}{2} - \frac{M_i}{V_i} \qquad \text{... (6.13)}$$

$$M_i = M_2 + M_4 + [Q \times (L-b)] + [\gamma_w \times H \times (h_i - a) \times L/2] - [K_{Ab} \times \gamma_b \times \frac{h_i^2}{2} \times \frac{h_i}{3} + K_{Ab} \times q \times h_i \times \frac{h_i}{2}] \qquad \text{... (6.14)}$$

Tension in reinforcement due to vertical load (V_1):

For $0 < h_i < 2x(L-b)$,

$$T_{i2} = K_{Ab} \times \sigma_{vi} \times S_{Vi} \qquad \text{... (6.15)}$$

Where,

$$\sigma_{vi} = \frac{V}{D_i} \times \left(1 + \frac{6 \times e'}{D_i}\right) \qquad \text{... (6.16)}$$

$V = V_1$,

$$D_i = b + (h_i/2) \qquad \text{... (6.17)}$$

$$e' = \frac{D_i}{2} - \frac{b}{2} + \frac{e \times D_i}{b} \qquad \text{... (6.18)}$$

For $h_i \geq 2x(L-b)$, $D_i = L$.

Tension in reinforcement due to horizontal load (H_1):

Depth of influence = h_e.

$$h_e = \frac{b}{\tan\left(45^0 - \frac{\phi_w}{2}\right)} \qquad \text{... (6.19)}$$

When $h_e < H' = H\text{-}a$,

$$T_{i3} = \frac{2 \times H_1}{h_e} \times \left[1 - \frac{h_i}{h_e}\right] \times S_{Vi} \qquad \text{... (6.20)}$$

For safe design, $T_i > R_T$.

R_T = safe design strength of reinforcement.

Pull-out Failure: it is also necessary to consider separately the possibility of inclined failure planes passing through the wall forming unstable wedges of soil bounded by the front face of the wall, the top ground surface and the potential failure plane.

Considering that failure plane passes through the toe of the abutment.

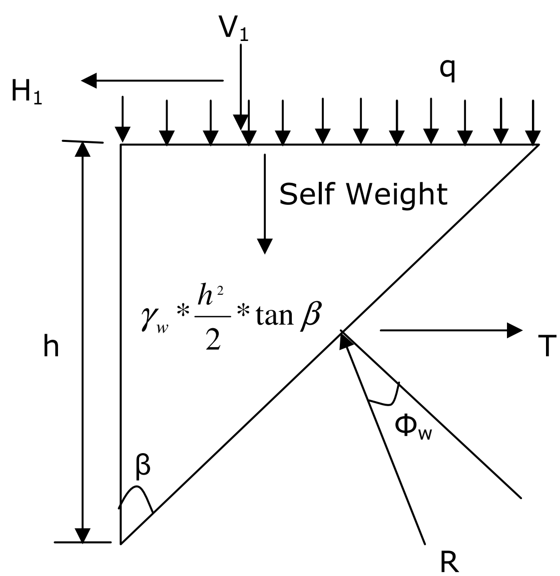

Fig. 6.4 forces on the wedge

In Fig. 6.4, T and R represent respectively the total tension in the reinforcement layers intercepted by the failure plane and the resultant frictional force acting on the failure plane.

Taking ΣV = 0 and ΣH = 0,

Force in the Wedge = T,

$$T = \left[\frac{h \times \tan\beta \times (\gamma_w h + 2q) + 2 \times V_1}{2 \times \tan(\phi_w + \beta)}\right] + H_1 \qquad \text{... (6.21)}$$

No. of layers of reinforcement = N = (H-a)/S_V. ... (6.22)

The anchorage length (L_{ip}) for the reinforcement at depth h_i,

$$L_{ip} = \frac{T_n \times \text{factorofsafety}}{2\alpha \times \tan\phi_w \times (\gamma_w \times h_i + q)} \qquad \text{... (6.23)}$$

$T_n = T_{max}/N$.

Factor of Safety generally taken as 2 to 3.

α = Coefficient of interaction between soil and reinforcement (0.8 to 0.9).

Available Embedment Length = $H - h \times \tan\left(45 - \frac{\phi_w}{2}\right)$ ... (6.24)

For safe design,

Available embedment length > provided anchorage length.

6.6 DESIGN EXAMPLE

6.6.1 Design of the Reinforced Earth Bridge Abutment

Aim: To find out the appropriate reinforcement for the bridge abutment (Fig. 6.5) with a F.O.S = 2.

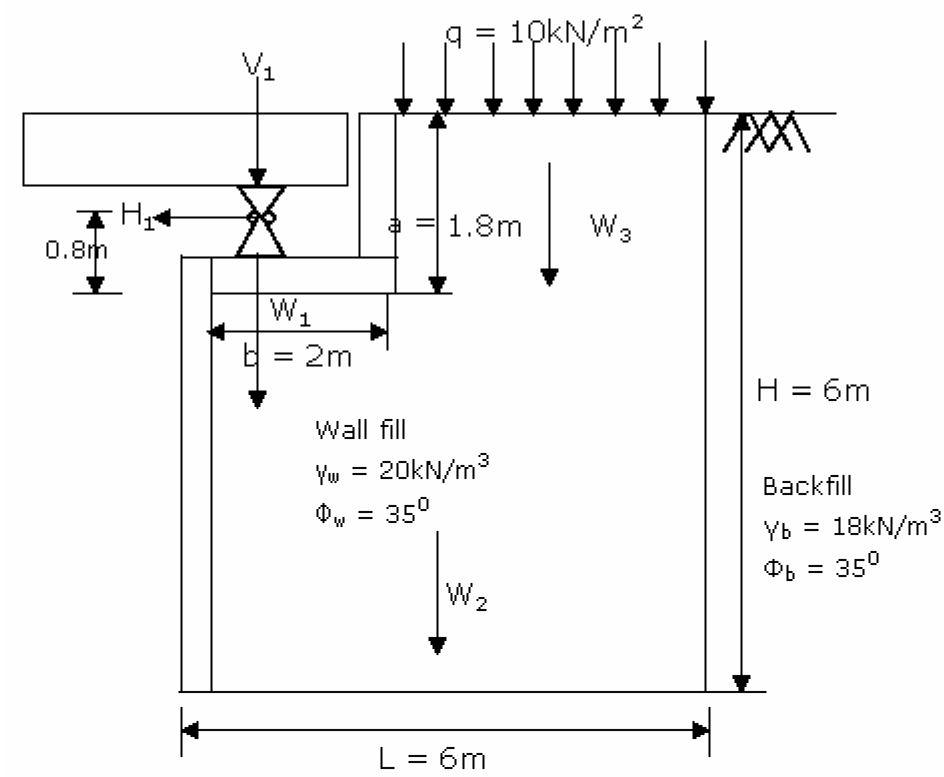

Fig. 6.5 Section of the bridge abutment

Data:

Height of the backfill (H) =	6	m
Length of the abutment (L) =	6	m
Vertical bridge seat load (V_1) =	150	kN/m
Horizontal bridge seat load (H_1) =	25	kN/m
Allowable soil pressure =	250	kN/m^2
Safe design strength of reinforcement (R_T) =	17.5	kN/m
Uniform Surcharge on abutment (q) =	10	kN/m^2

Properties of the Material:

Backfill:

Density of the backfill (γ_b) =	18	kN/m^3

Angle of friction (Φ_b) = 35°

Wall fill:

Density of the wallfill (γ_w) = 20 kN/m^3

Angle of internal friction (Φ_w) = 35°

Distance between C.G. of bridge seat to bottom of the seat (as shown in figure 6.5) = 0.8 m

a (as shown in the figure 6.5) = 1.8 m

b (as shown in the figure 6.5) = 2 m

Assume,

μ = 0.55

α = 0.95

Design:

A) External Stability:

Assume self of the bridge seat (W_1) = 25 kN/m

$W_2 = \gamma_w \times L \times (H - a)$ = 20x6x(6-1.8) = 504 kN/m

$W_3 = \gamma_w \times (L - b) \times a$ = 20x(6-2)x1.8 = 144 kN/m

$K_{Ab} = \dfrac{1 - \sin\phi_w}{1 + \sin\phi_w}$ = 0.271

$$P_1 = K_{Ab} \times \gamma_b \times H \times \frac{H}{2}$$

P_1 = 0.271x35x6x6/2 = 87.80 kN/m

$$P_2 = K_{Ab} \times q \times H$$

P_2 = 0.271x10x6 = 16.26 kN/m

$$F.O.S_{(sliding)} = \frac{\mu \times (V_1 + W_1 + W_2 + W_3)}{(H_1 + P_1 + P_2)}$$

$$F.O.S_{(sliding)} = \frac{(0.55x(150+25+504+144)}{(25+87.8+16.26)} = 3.507 > 2$$

Hence Safe.

$$F.O.S_{(overturning)} = \frac{M_1 + M_2 + M_3 + M_4}{M_5 + M_6 + M_7}$$

$M_1 = (V_1 x b/2)$ = 150 kNm

$M_2 = (W_1 x b/2)$ = 25 kNm

$M_3 = (W_2 x L/2)$ = 1512 kNm

$M_4 = W_3 x(L-b) =$ 576 kNm

$M_5 = H_1 x[H-(a-0.8)] =$ 125 kNm

$M_6 = P_1 x(H/3) =$ 175.6 kNm

$M_7 = P_2 x(H/2) =$ 48.78 kNm

$$F.O.S(overturning) = \frac{150+25+1512+576}{125+175.6+48.78} = 6.477 > 2$$

Hence safe.

Total vertical load = $V_T = V_1+W_1+W_2+W_3+[qx(L-b)]$

Total vertical load = V_T = 863 kN/m

Eccentricity = $e = \dfrac{L}{2} - \dfrac{M}{V_T}$

$M = [M_1+M_2+M_3+M_4+Qx(L-b)]-[M_5+M_6+M_7]$

$Q = qx(L-b) = 40$ kN/m

M = 2074 kNm

e = 0.597 m

Earth Pressure Calculation:

$$\sigma_{max} = \frac{V_T}{L} + \frac{6 \times V_T \times e}{L^2} = 229.73 \text{ kN/m}^2 < 250 \text{ kN/m}^2 \qquad \text{O.K.}$$

$$\sigma_{min} = \frac{V_T}{L} - \frac{6 \times V_T \times e}{L^2} = 57.94 \text{ kN/m}^2 > 0 \qquad \text{O.K.}$$

B) Internal Stability:

1. Tension Failure:

Tensile force T_i per m width in the reinforcement at depth h_i,

$$T_i = T_{i1} + T_{i2} + T_{i3}$$

T_{i1} = Tension in reinforcement due to soil & surcharge (q)

$$T_{i1} = K_{Ab} \times \sigma_{vi} \times S_{Vi}$$

K_{Ab} = 0.271

$$\sigma_{vi} = \frac{V_i}{L} + \frac{6 \times V_i \times e_i}{L^2}$$

$V_i = W_1+W_3+Q+[\gamma_w x H x(h_i-a)]-\gamma_b x H x b$

W_1 = 25 kN/m

W_3 = 144 kN/m

Q = 40 kN/m

γ_b x H x b = 216 kN/m

γ_w x H x (h_i-a) = 120 x (h_i-1.8) kN/m

V_i = 120xhi-7

$$e_i = \frac{L}{2} - \frac{M_i}{V_i}$$

$$M_i = M_2 + M_4 + [Q \times (L-b)] + [\gamma_w \times H \times (h_i - a) \times L/2] - [K_{Ab} \times \gamma_b \times \frac{h_i^2}{2} \times \frac{h_i}{3} + K_{Ab} \times q \times h_i \times \frac{h_i}{2}]$$

M_2 = 25 kNm

M_4 = 576 kNm

Qx(L-b) = 160 kNm

γ_wxHx(h_i-a)xL/2 = 360x(h_i-1.8)

$$K_{Ab} \times \gamma_b \times \frac{h_i^2}{2} \times \frac{h_i}{3} = 0.813 x h_i^3$$

$$K_{Ab} \times q \times h_i \times \frac{h_i}{2} = 1.355 x h_i^2$$

M_i = (-0.813xh_i^3)-1.355xh_i^2+360xh_i+113

$$e_i = \frac{3 - (-0.813xhi^3) - 1.355xhi^2 x360xhi + 113}{120xhi - 7}$$

σ_{vi} = 0.1355xh_i^3+0.226xh_i^2+60xh_i-23.5

T_{i1} = 0.037xh_i^3 + 0.0612xh_i^2 + 16.26xh_i - 6.368

T_{i2} = Tension in reinforcement due to vertical load V_1.

2x(L-b) = 8 m

for h_i < 2x(L-b),

$$T_{i2} = K_{Ab} \times \sigma_{vi} \times S_{Vi}$$

$$\sigma_{vi} = \frac{V}{D_i} \times \left(1 + \frac{6 \times e'}{D_i}\right)$$

V = V_1 = 150 kN/m

D_i = b+(h_i/2) = 2 (+0.5xh_i)

$$e' = \frac{D_i}{2} - \frac{b}{2} + \frac{e \times D_i}{b}$$

$$e' = \frac{2+0.5h_i}{2} - \frac{2.0}{2} + 0$$

e' = 0.25xh_i

$$\sigma_{vi} = \frac{150}{2+0.5hi} \times (1+((6x0.25xh_i)/(2+0.5xh_i))$$

$$\sigma_{vi} = \frac{150x(2+2xh_i)}{(2+0.5xh_i)^2}$$

$$T_{i2} = 81.3 \times \frac{(1+h_i)}{(2+0.5h_i)^2} \times S_{Vi}$$

T_{i3} = Tension in reinforcement due to horizontal load H_1.

h_e = Depth of Influence.

$$h_e = \frac{b}{\tan\left(45^0 - \frac{\phi_w}{2}\right)} = 3.842 \text{ m}$$

Here, h_e < H', (H' = 4.2m)

So,

$$T_{i3} = \frac{2 \times H_1}{h_e} \times \left[1 - \frac{h_i}{h_e}\right] \times S_{Vi}$$

T_{i3} = 13.01x(1-h_i/3.84)xS_{Vi}

T_{i3} = 13.01 - 3.387 xh_ixS_{Vi}

For safe design, $T_i > R_T$.

R_T = safe design strength of reinforcement.

R_T = 17.5 kN/m

So, T_i = 17.5 kN/m

Total tension in the reinforcement located at depth hi,

$T_i = [0.037h_i^3+0.0612h_i^2+12.87h_i+6.642+325.2x((1+h_i)/(4+h_i)2)]xS_{Vi}$

From table 6.2, for different values of hi,

Table 6.2 Calculation of Vertical Spacing of Geogrids

h_i (m)	S_{vi} (m)
0	0.649
1	0.384
2	0.292
3	0.239
4	0.201

Provide vertical spacing (S_V) = 0.25 m

The layout of the grids is proposed as shown in the figure 6.6.

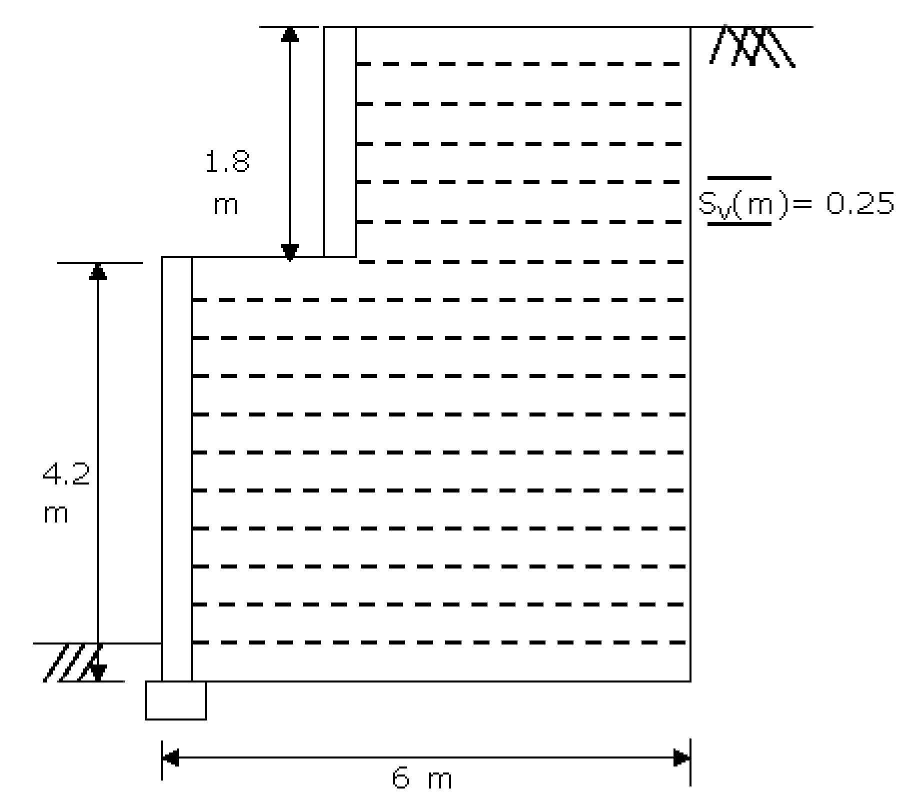

Fig. 6.6 Layout of geogrids in bridge abutment

2. Pull-out Failure:

Considering that failure plane passes through the toe of the abutment (fig. 6.7).

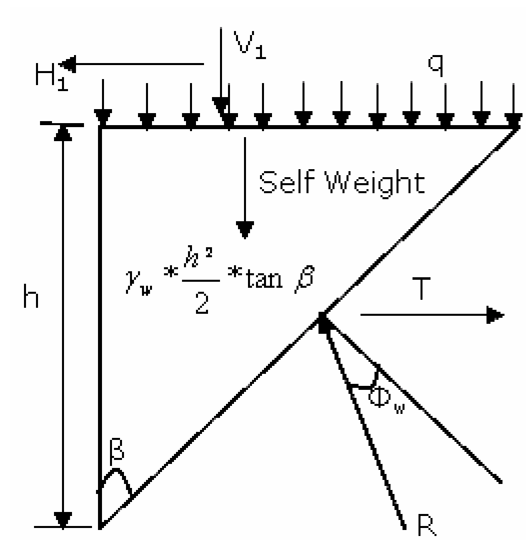

Fig. 6.7 Failure Wedge

Force in the wedge:

$$T = \left[\frac{h \times \tan\beta \times (\gamma_w h + 2q) + 2 \times V_1}{2 \times \tan(\phi_w + \beta)}\right] + H_1$$

$h = H\text{-}a = 4.2$ m

q = surcharge + $(\gamma_w x a)$ = 46 kN/m^2

$$T = 25 + \frac{4.2 x \tan\beta x (20x4.2+2x46)+2x150}{2x\tan(35+\beta)}$$

In table 6.3, for different values of β,

Table 6.3 Calculation of Force in the Wedge (T)

β (deg.)	T(kN/m)
25	211.1
30	194.5
35	173.8
40	148.3
45	116.6

Max. Value of T = 211.10 kN/m

N = 16.8 ≈ 17 layers of reinforcement.

There will be 17 layers of reinforcement in lower 4.2m portion.

T_n = 211.1/17 = 12.56 kN/m

The anchorage length (L_{ip}) for the reinforcement at depth h_i,

$$L_{ip} = \frac{T_n \times \text{factorofsafety}}{2\alpha \times \tan\phi_w \times (\gamma_w \times h_i + q)}$$

L_{ip} = 0.145 m

Available Embedment Length,

$$H - h \times \tan\left(45 - \frac{\phi_w}{2}\right) = 3.8136 \text{ m} >> 0.145 \text{ m}$$

Hence Design is Safe.

6.7 SUMMARY

In this chapter true reinforced earth bridge abutment is discussed. Advantages of the reinforced earth bridge abutment over R.C.C bridge abutment are discussed. True reinforced earth bridge abutment is designed with geogrid reinforcement.

7. COST COMPARATIVE STUDY

7.1 GENERAL

This chapter gives the comparison of cost, quantity of concrete and quantity of steel between reinforced earth retaining wall and R.C.C retaining wall. Microsoft Excel sheet is prepared for quantity calculation and cost comparison for both the types of retaining wall. This chapter also gives the comparative study of reinforced earth abutment and R.C.C bridge abutment.

7.2 QUANTITY CALCULATION

7.2.1 Retaining Wall

Quantity of the reinforced earth retaining wall is calculated from the Fig. 7.1 and quantity calculation is given in the Table 7.1.

A) Reinforced Earth Retaining Wall:

Total length of the retaining wall = 150m

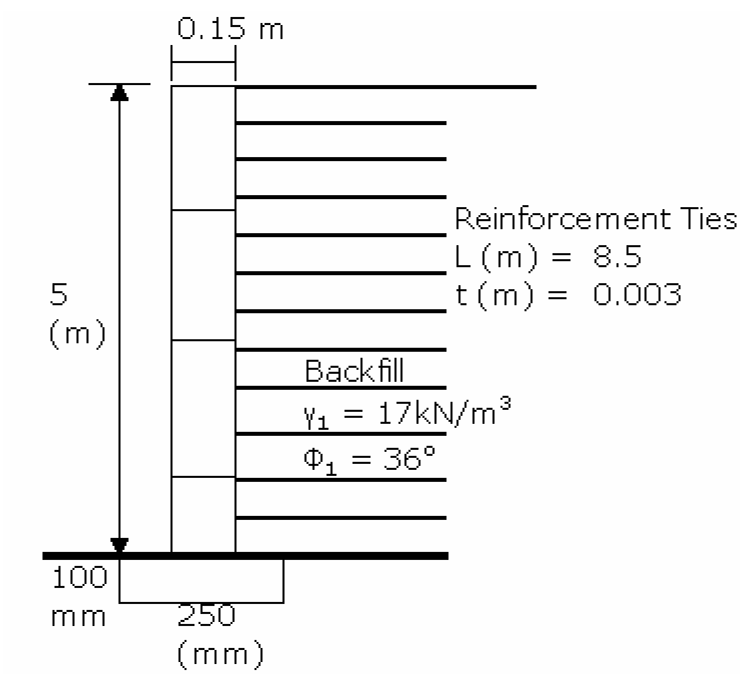

Fig. 7.1 Details of Reinforced Earth Retaining Wall

Table 7.1 Quantity Calculation for Reinforced Earth Retaining Wall

Sr. No.	Description			Quantity	Unit
1	**Concrete:**				
	Footing:			3.75	m^3
	Width of footing =	250	mm		
	Thickness of footing =	100	mm		
	Facing Panel:			112.5	m^3
	Height of panel =	1.5	m		
	Width of panel =	1.5	m		
	Thickness of panel =	0.15	m		
	Area of one panel =	2.25	m^2		
	Height of wall (H) =	5	m		
	Required no. of panel =	333.3			
	Total Volume of Concrete =			**116.3**	$\mathbf{m^3}$
2	**Steel:**				
	Galvanized Steel Strip Reinforcement:			20338	kg
	Thickness of strip =	0.003	m	20.34	Tonne
	Width of strip =	0.076	m		
	Length of strip =	8.5	m		
	No. of strips/panel =	4			
	Total Length =	11333	m		
	Density of steel =	7850	kg/m^3		
	Total volume of steel =	2.591	m^3		
	Facing Panel:			7015	kg
	Diameter of bar =	10	mm	7.015	Tonne
	Spacing of bars =	150	mm c/c		
	Length of bar =	1.6	m		
	No. of bars per panel =	10.67			
	Total length =	11378	m		
	Total volume of steel =	0.894	m^3		
	Density of steel =	7850	kg/m^3		
	Total Steel =			**27.35**	**Tonne**

B) R.C.C Retaining Wall:

Total length of the retaining wall = 150m

Quantity of the R.C.C retaining wall is calculated from the Fig. 7.2 and quantity calculation is given in the Table 7.2.

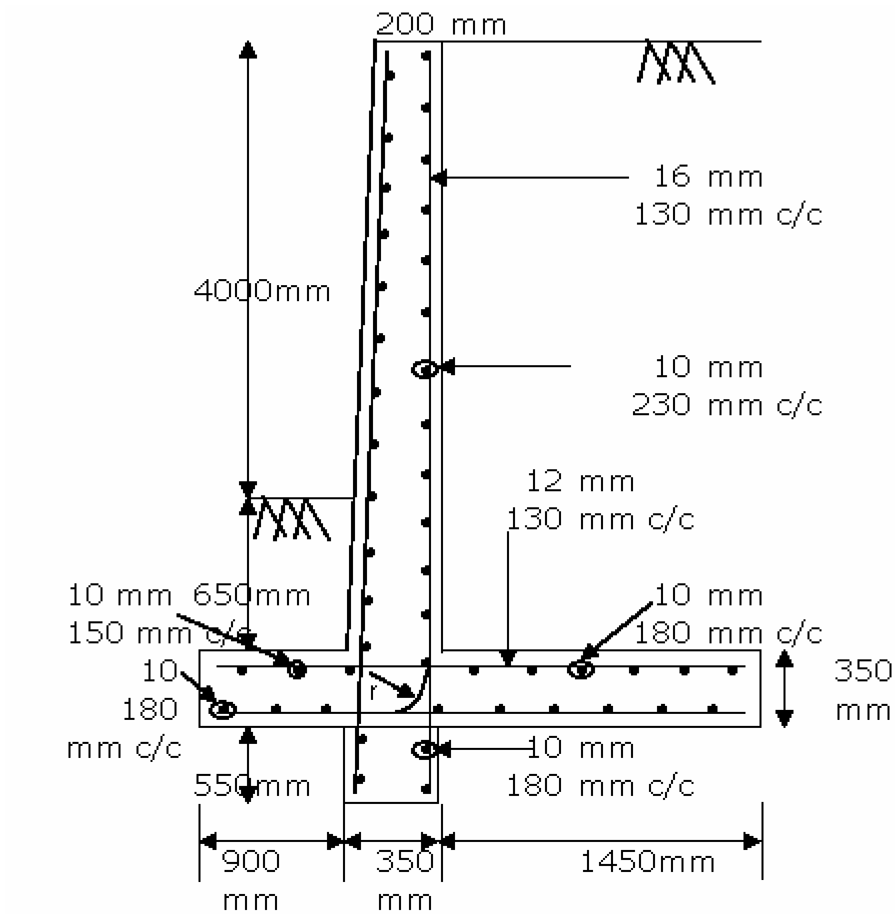

Fig. 7.2 Details of R.C.C Retaining Wall

Table 7.2 Quantity Calculation for R.C.C Retaining Wall

Sr. No.	Description			Quantity	Unit
1	**Concrete:**				
	Stem:			275.4	m^3
	Height of stem wall =	5.65	m		
	Thickness of Stem at top =	0.25	m		
	Thickness of stem at bottom =	0.4	m		
	Heel Slab:			138.6	m^3
	Width of heel slab =	2.2	m		
	Thickness of heel slab =	0.42	m		

	Toe Slab:			63	m^3
	Width of toe slab =	1	m		
	Thickness of toe slab =	0.42	m		
	Shear Key:			33	m^3
	Depth of shear key =	0.55	m		
	Thickness of shear key =	0.4	m		
	Total volume of concrete =			**510**	**m^3**
2	**Steel:**				
	Stem:				
	Main Steel:			20470	kg
	Diameter of bar =	20	mm	20.47	Tonne
	Spacing of bar =	130	mm		
	Cover of the bar =	0.04	m		
	Development length =	0.9	m		
	Overall height of wall =	6	m		
	Weight of bar per m run =	2.47	kg/m		
	Length of bar =	7.18	m		
	No. of bars =	1154	Nos.		
	Total length =	8287	m		
	Distribution Steel:			3016	kg
	Diameter of bar =	10	mm	3.016	Tonne
	Spacing of bar =	190	mm		
	Weight of bar per m run =	0.62	kg/m		
	Length of bar =	151.3	m		
	No. of bars =	32.16	Nos.		
	Total length =	4864	m		
	Steel for crack control (Horizontal):			1301	kg
	Diameter of bar =	10	mm	1.301	Tonne
	Spacing of bar =	460	mm		
	Weight of bar per m run =	0.62	kg/m		
	Length of bar =	151.3	m		
	No. of bars =	13.87	Nos.		
	Total length =	2098	m		
	Steel for crack control (Vertical):			1236	kg
	Diameter of bar =	10	mm	1.236	Tonne
	Spacing of bar =	460	mm		
	Weight of bar per m run =	0.62	kg/m		
	Length of bar =	6.1	m		
	No. of bars =	326.9	Nos.		
	Total length =	1994	m		

	Heel Slab:				
	Main Steel:			5189	kg
	Diameter of bar =	16	mm	5.189	Tonne
	Spacing of bar =	110	mm		
	Width of heel slab =	2.2	m		
	Cover of bar =	0.04	m		
	Weight of bar per m run =	1.58	kg/m		
	Length of bar =	2.408	m		
	No. of bars =	1364	Nos.		
	Total length =	3284	m		
	Distribution Steel:			1419	kg
	Diameter of bar =	10	mm	1.419	Tonne
	Spacing of bar =	150	mm		
	Weight of bar per m run =	0.62	kg/m		
	Length of bar =	151.3	m		
	No. of bars =	15.13	Nos.		
	Total length =	2289	m		
	Steel for crack control:			1191	kg
	Diameter of bar =	10	mm	1.191	Tonne
	Spacing of bar =	360	mm		
	Weight of bar per m run =	0.62	kg/m		
	Length of bar =	2.3	m		
	No. of bars =	417.4	Nos.		
	Total length =	960.1	m		
	Toe Slab:				
	Main Steel:			3649	kg
	Diameter of bar =	20	mm	3.649	Tonne
	Spacing of bar =	130	mm		
	Width of toe slab =	1	m		
	Weight of bar per m run =	2.47	kg/m		
	Length of bar =	1.28	m		
	No. of bars =	1154	Nos.		
	Total length =	1477	m		
	Distribution Steel:			669	kg
	Diameter of bar =	10	mm	0.669	Tonne
	Spacing of bar =	150	mm		
	Weight of bar per m run =	0.62	kg/m		
	Length of bar =	151.3	m		
	No. of bars =	7.133	Nos.		
	Total length =	1079	m		

	Shear Key:			387.6	kg
	Diameter of bar =	10	mm	0.388	Tonne
	Spacing of bar =	150	mm		
	Weight of bar per m run =	0.62	kg/m		
	Length of bar =	151.3	m		
	No. of bars =	4.133	Nos.		
	Total length =	625.2	m		
	Total Steel =			**38.53**	**Tonne**

7.2.2 Abutment

A) Reinforced Earth Abutment:

Quantity of the reinforced earth bridge abutment is calculated from the Fig. 7.3 and quantity calculation is given in the Table 7.3.

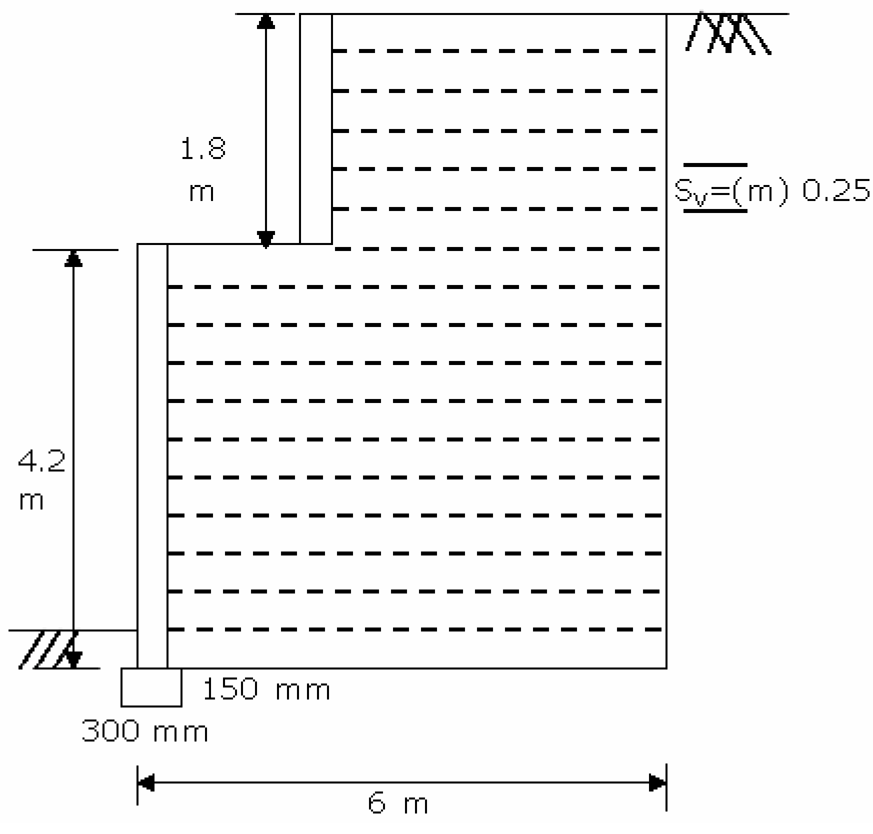

Fig. 7.3 Details of Reinforced Earth Bridge Abutment

Table 7.3 Quantity Calculation for Reinforced Earth Abutment

Sr. No.	Description			Quantity	Unit
1	**Concrete:**				
	Footing:			0.27	m^3
	Width of footing =	300	mm		
	Thickness of footing =	150	mm		
	Facing Panel:			216	m^3
	Height of panel =	2	m		
	Width of panel =	2	m		
	Thickness of panel =	0.18	m		
	Area of one panel =	4	m^2		
	Height of backfill (H) =	6	m		
	Required no. of panel =	300			
	Total Volume of Concrete =			**216.3**	**m^3**
2	**Steel:**				
	Geogrid Reinforcement:			25920	kg
	Spacing of grids =	0.25	m	25.92	Tonne
	Width of grid =	6	m		
	Length of grid =	6	m		
	No. of grids/panel =	6			
	Total Length =	10800	m		
	Density of geogrids =	0.4	kg/m^3		
	Total volume of grids =	64800	m^3		
	Facing Panel:			11653	kg
	Diameter of bar =	10	mm	11.65	Tonne
	Spacing of bars =	140	mm c/c		
	Length of bar =	2.1	m		
	No. of bars per panel =	15			
	Total length =	18900	m		
	Total volume of steel =	1.484	m^3		
	Density of steel =	7850	kg/m^3		
	Total Steel =			**37.57**	**Tonne**

B) R.C.C bridge abutment:

Quantity of the R.C.C bridge abutment is calculated from the Fig. 7.4 and quantity calculation is given in the Table 7.4.

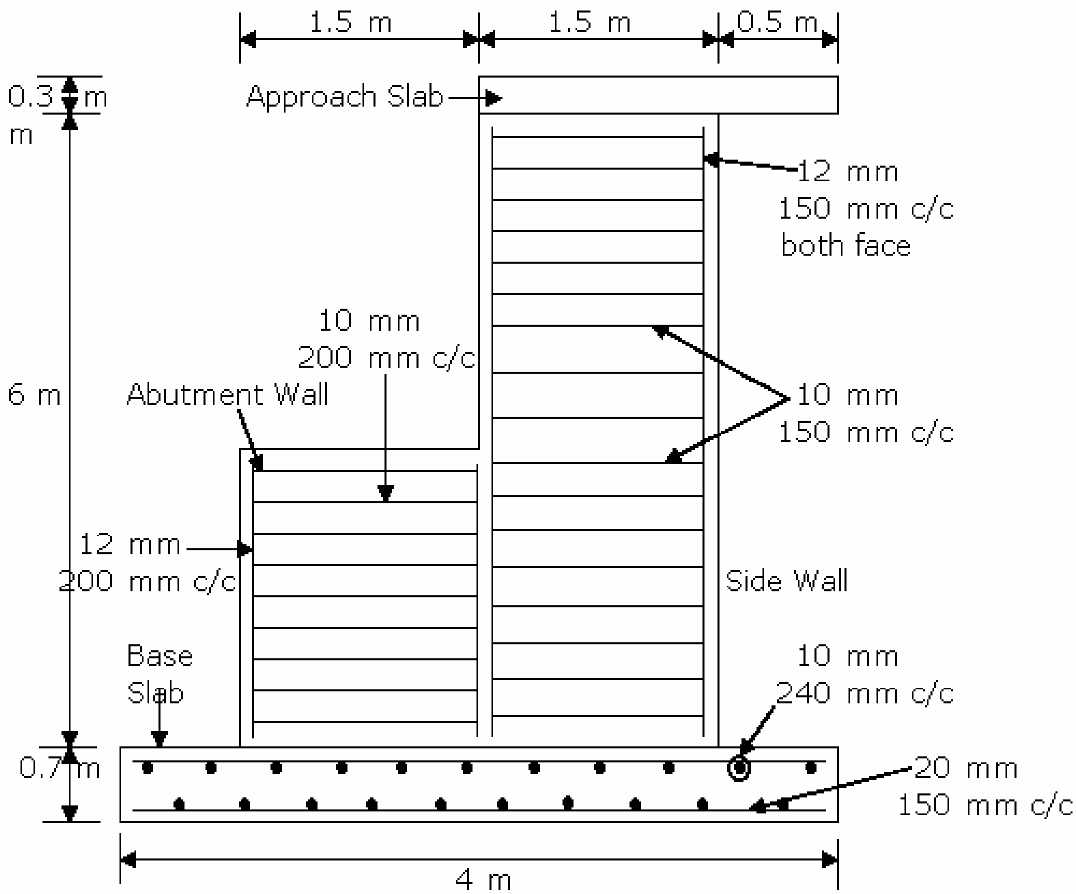

Fig. 7.4 Details of R.C.C Bridge Abutment

Table 7.4 Quantity Calculation for R.C.C Bridge Abutment

Sr. No.	Description			Quantity	Unit
1	**Concrete:**				
	Base Slab:			16.8	m^3
	Width of the base slab =	4	m		
	Thickness of the base slab =	0.7	m		
	Abutment Wall:			270	m^3
	Height of the Abutment Wall =	3	m		
	Width of the Abutment Wall =	1.5	m		

	Side Wall:			540	m^3
	Height of the Side Wall =	6	m		
	Width of the Side Wall =	1.5	m		
	Approach Slab:			3.6	m^3
	Width of the Approach Slab =	2	m		
	Thickness of the Approach Slab =	0.3	m		
	Total Volume of Concrete =			**830.4**	**m^3**
2	**Steel:**				
	Base Slab:				
	Main Steel:			10281	kg
	Diameter of bar =	20	mm	10.28	Tonne
	Spacing of bar =	150	mm		
	Cover of the bar =	0.05	m		
	Development Length =	0.9	m		
	Weight of bar per m run =	2.47	kg/m		
	Length of the bar =	5.16	m		
	No. of bars =	40.33	Nos.		
	Total Length =	208.1	m		
	Distribution Steel:			1591	kg
	Diameter of bar =	10	mm	1.591	Tonne
	Spacing of bar =	240	mm		
	Weight of bar per m run =	0.62	kg/m		
	Length of the bar =	7.44	m		
	No. of bars =	17.25	Nos.		
	Total Length =	128.3	m		
	Abutment Wall:				
	Main Steel:			16917	kg
	Diameter of bar =	12	mm	16.92	Tonne
	Spacing of bar =	200	mm		
	Cover of the bar =	0.05	m		
	Weight of bar per m run =	0.89	kg/m		
	Length of the bar =	3.116	m		
	No. of bars =	305	Nos.		
	Total Length =	950.4	m		
	Distribution Steel:			1659	kg
	Diameter of bar =	10	mm	1.659	Tonne
	Spacing of bar =	200	mm		
	Weight of bar per m run =	0.62	kg/m		
	Length of the bar =	2.94	m		
	No. of bars =	45.5	Nos.		
	Total Length =	133.8	m		

	Side Wall:				
	Main Steel:			43909	kg
	Diameter of bar =	12	mm	43.91	Tonne
	Spacing of bar =	150	mm		
	Cover of the bar =	0.05	m		
	Weight of bar per m run =	0.89	kg/m		
	Length of the bar =	6.116	m		
	No. of bars =	403.3	Nos.		
	Total Length =	2467	m		
	Distribution Steel:			2929	kg
	Diameter of bar =	10	mm	2.929	Tonne
	Spacing of bar =	150	mm		
	Weight of bar per m run =	0.62	kg/m		
	Length of the bar =	2.94	m		
	No. of bars =	80.33	Nos.		
	Total Length =	236.2	m		
	Total Steel =			**77.29**	**Tonne**

7.3 QUANTITY COMPARISON

7.3.1 Retaining Wall

A) Comparison of Concrete Quantity:

Table 7.5 Quantity of the Concrete

Height of the Wall (m)	Reinforced Earth Retaining Wall (m^3)	R.C.C Cantilever Retaining Wall (m^3)
4	61.8	252.5
5	116.3	510
6	158.6	672.4

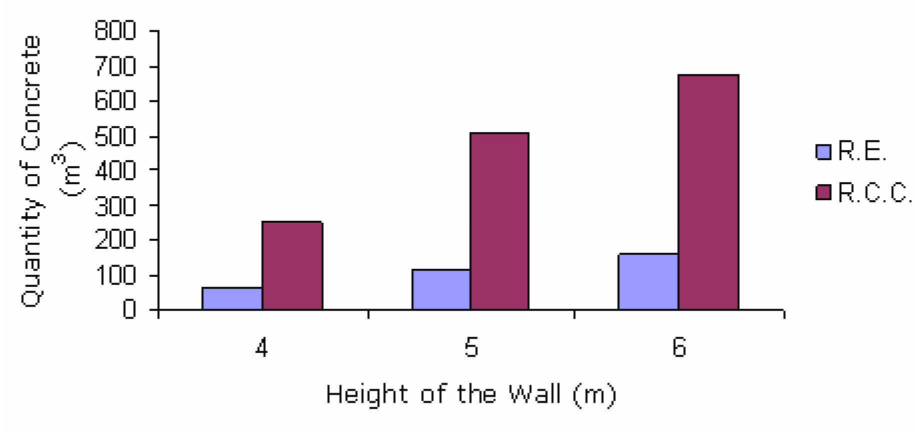

Fig. 7.5 Comparison of Concrete Quantity for retaining wall

B) Comparison of Steel Quantity:

Table 7.6 Quantity of the Steel

Height of the Wall (m)	Reinforced Earth Retaining Wall (Tonne)	R.C.C Cantilever Retaining Wall (Tonne)
4	19.87	23.65
5	27.35	38.53
6	39.3	47.64

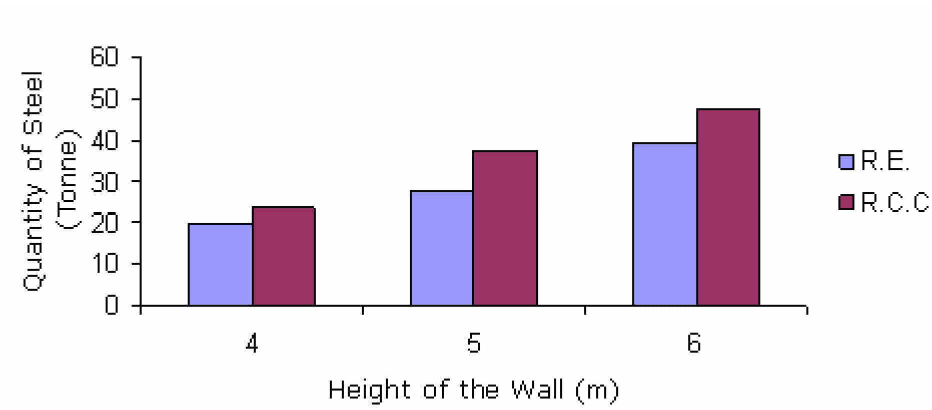

Fig. 7.6 Comparison of Steel Quantity for retaining wall

7.3.2 Abutment:

A) Comparison of Concrete Quantity:

Table 7.7 Quantity of the Concrete

Height of the Abutment (m)	Reinforced Earth Abutment (m^3)	R.C.C Bridge Abutment (m^3)
4	104.1	370.8
5	150.2	577.7
6	216.3	830.4

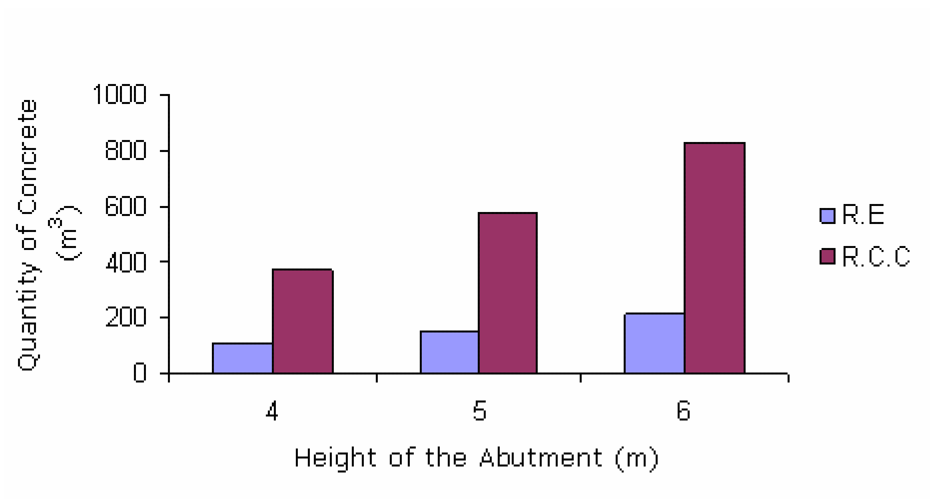

Fig. 7.7 Comparison of Concrete Quantity for bridge abutment

B) Comparison of Steel Quantity:

Table 7.8 Quantity of the Steel

Height of the Abutment (m)	Reinforced Earth Abutment (Tonne)	R.C.C Bridge Abutment (Tonne)
4	24.08	40.01
5	30.66	57.38
6	37.57	77.29

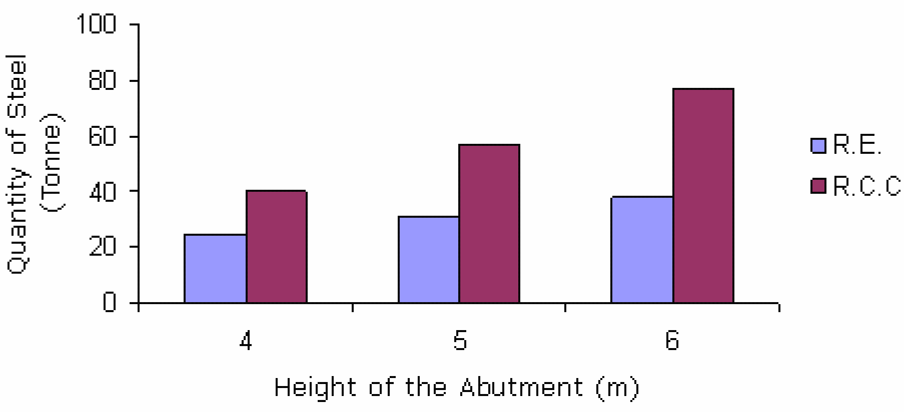

Fig. 7.8 Comparison of Steel Quantity for bridge abutment

7.4 COST COMPARISON

7.4.1 Retaining Wall

Rates as per S.O.R,

Concrete w/o formwork = 2600 Rs/m^3.

Steel Bars = 32 Rs/kg.

Galvanized steel strips = 52 Rs/kg.

Table 7.9 Cost Comparison

Sr. No.	Description	Type of Wall	
		R.E.	**R.C.C**
1	**Height of wall = 4 m**		
	Quantity of concrete (m^3) =	61.8	252.5
	Cost of Concrete (Rs.) =	160680	656500
	Quantity of Steel bars (kg) =	6475	23650
	Cost of Steel bars (Rs.) =	207200	756800
	Galvanized Steel Strips (kg) =	13399	-
	Cost of Steel Strips (Rs.) =	696748	-
	Total Cost (Rs.) =	1064628	1413300
	Total Cost per meter (Rs./run m) =	**7097.5**	**9422**
2	**Height of wall = 5 m**		

	Quantity of concrete (m^3) =	116.3	510
	Cost of Concrete (Rs.) =	302380	1326000
	Quantity of Steel bars (kg) =	7015	38530
	Cost of Steel bars (Rs.) =	224480	1193280
	Galvanized Steel Strips (kg) =	20338	-
	Cost of Steel Strips (Rs.) =	1057576	-
	Total Cost (Rs.) =	1584436	2519280
	Total Cost per meter (Rs./run m) =	**10563**	**16795**
3	**Height of wall = 6 m**		
	Quantity of concrete (m^3) =	158.6	672.4
	Cost of Concrete (Rs.) =	412360	1748240
	Quantity of Steel bars (kg) =	7427	47640
	Cost of Steel bars (Rs.) =	237664	1524480
	Galvanized Steel Strips (kg) =	31870	-
	Cost of Steel Strips (Rs.) =	1657240	-
	Total Cost (Rs.) =	2307264	3272720
	Total Cost per meter (Rs./run m) =	**15382**	**21818**

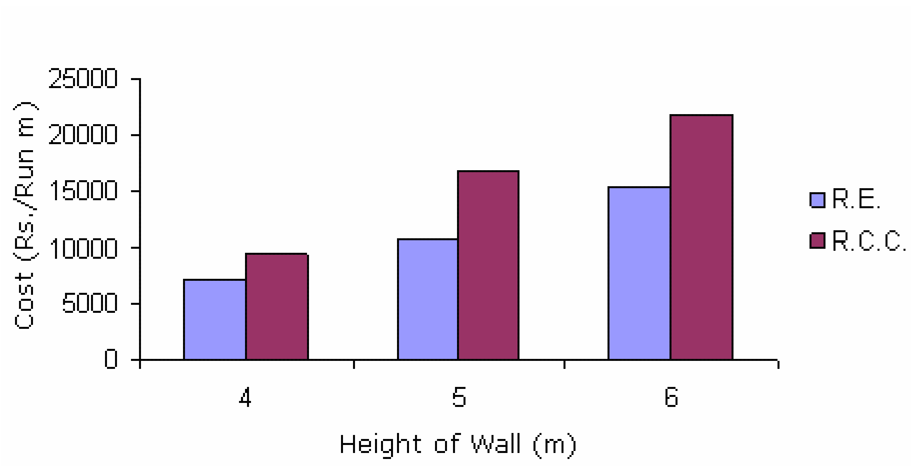

Fig. 7.9 Cost Comparison for retaining wall

7.4.2 Abutment

Rates as per S.O.R,

Concrete w/o formwork = 2600 Rs/m^3.

Steel Bars = 32 Rs/kg.

Geogrid Reinforcement = 50 Rs/kg.

Table 7.10 Cost Comparison

Sr. No.	Description	Type of Abutment	
		R.E.	**R.C.C**
1	**Height of Abutment = 4 m**		
	Quantity of concrete (m^3) =	104.1	370.8
	Cost of Concrete (Rs.) =	270660	964080
	Quantity of Steel bars (kg) =	6800	40010
	Cost of Steel bars (Rs.) =	217600	1280320
	Geogrid Reinforcement (kg) =	17280	-
	Cost of Geogrids (Rs.) =	864000	-
	Total Cost (Rs.) =	1352260	2244400
	Total Cost per meter (Rs./run m) =	**225377**	**374067**
2	**Height of Abutment = 5 m**		
	Quantity of concrete (m^3) =	150.2	577.7
	Cost of Concrete (Rs.) =	390520	1502020
	Quantity of Steel bars (kg) =	9060	57380
	Cost of Steel bars (Rs.) =	289920	1836160
	Geogrid Reinforcement (kg) =	21600	-
	Cost of Geogrids (Rs.) =	1080000	-
	Total Cost (Rs.) =	1760440	3338180
	Total Cost per meter (Rs./run m) =	**293407**	**556363**
3	**Height of Abutment = 6 m**		
	Quantity of concrete (m^3) =	216.3	830.4
	Cost of Concrete (Rs.) =	562380	2159040
	Quantity of Steel bars (kg) =	11650	77290
	Cost of Steel bars (Rs.) =	372800	2473280
	Geogrid Reinforcement (kg) =	25920	-
	Cost of Geogrids (Rs.) =	1296000	-
	Total Cost (Rs.) =	2231180	4632320
	Total Cost per meter (Rs./run m) =	**371863**	**772053**

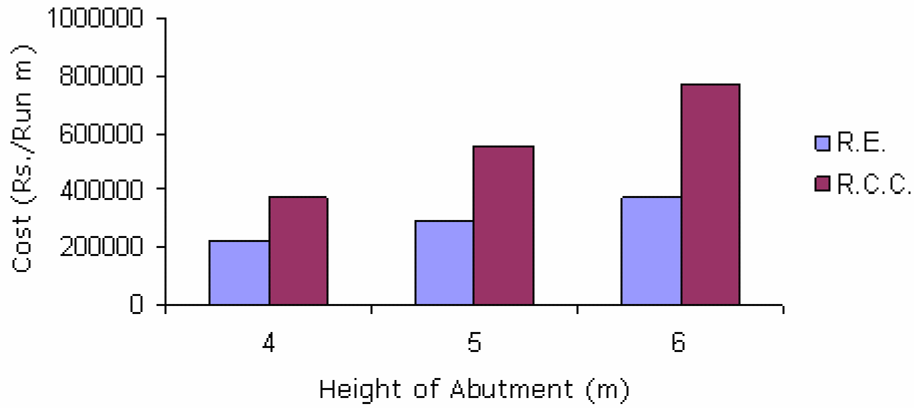

Fig. 7.10 Cost Comparison for bridge abutment

7.5 CLOSING REMARKS

The following remarks can be made from this study:

- Reinforced earth retaining wall is more economical compared to R.C.C retaining wall. Approximately 60 to 75% of the cost can be reduced in reinforced earth construction compared to R.C.C construction.
- Since depth and width of foundation for reinforced earth retaining wall is negligible as compared to R.C.C retaining wall, it also reduces the cost of the excavation and refilling.
- Quantity of concrete and formwork is less required in reinforced earth construction compared to R.C.C construction while there is little variation in quantity of the reinforcing steel required for both type of construction.
- Reinforced earth bridge abutment is more economical compared to R.C.C bridge abutment. Approximately 45 to 60% of the cost can be reduced with reinforced earth bridge abutment compared to R.C.C bridge abutment.
- As height of the abutment is increase, reinforced earth bridge abutment is more economical compared to R.C.C bridge abutment. Same as in retaining walls with increasing height of the wall reinforced

earth retaining walls are more economical compared to R.C.C retaining wall.

- Quantity of concrete and formwork is less required in reinforced earth bridge abutment compared to R.C.C bridge abutment while there is little variation in quantity of the reinforcing steel required for both the type of abutment.

8. SUMMARY AND CONCLUSIONS

8.1 SUMMARY

Reinforced Earth technique first introduced by a French engineer Henri Vidal. The trust reposed by him in this technique has been amply demonstrated by hundreds of civil engineering structures built using reinforced earth technique over the past few decades which performing satisfactorily. The apparently simple mechanism of reinforced earth and the economy in cost and time has made it an instant success with research workers and field engineers alike. The first reinforced earth structure built was the retaining wall of Pragnieres, France in 1965. First project of reinforced earth in India was retaining wall on the arterial expressway corridor project in Jammu.

Reinforced earth is a composite material which is formed by the association of soil and tension resistant elements in the form of sheet, strips, nets or mats of metal, synthetic fabrics or fibre reinforced plastics and arranged in the soil mass in such a way as to reduce or suppress the tensile strain which might develop under gravity and boundary forces. Advantages of the reinforced earth technique are Reliability, Economy, Adaptability, Environmental consideration and Aesthetic of the structure and architectural finish of the facing. The largest application of the soil reinforcement is for the construction of the earth structures with steep or vertical sides in lieu of the rigid retaining walls. Some of the field applications of reinforced earth technique are:

- For providing sharp differences of level between two horizontal platforms.
- For supporting and also being a boundary to a large inclined embankment.
- For providing horizontal platforms on sloping ground.
- As foundation slab.
- As quay walls.

- As bridge abutment.
- As reinforced dam.
- For raising height of exiting dam.
- As railways embankment.
- As reinforced earth arch.
- For bulk storage and handling.

One of the areas where the reinforced earth technique could be used very effectively is in the improvement of bearing capacity. For this study an experiment has been done on the bearing capacity of geotextile reinforced soil. Experiment results clearly show the effect of the geotextiles on the bearing capacity soil. Bearing capacity of geotextile reinforced soil is 10 to 35% higher than the unreinforced soil. So for the low bearing capacity soil, reinforced earth technique is effectively used.

Another important area where the reinforced earth technology used is in the construction of the retaining structures. Design principles of reinforced earth retaining wall are governed by satisfying internal stability and check for external stability these two conditions. Retaining wall is designed using metallic strip and geotextile. C program for the design of reinforced earth retaining wall is prepared.

By adopting the reinforced earth technology for slope the stability of the slope is increased. Usable land for the slope is also increased. With reinforced earth technique very steep slope can be constructed. The design concepts of reinforced earth slope are same as that of reinforced earth retaining wall. Reinforced earth slope is designed with the geogrid reinforcement.

Reinforced earth bridge abutment is economical than R.C.C bridge abutment because there is no piles required for reinforced earth bridge abutment and quantity of concrete required is also very less as there is mostly mass of the reinforced earth. Reinforced earth bridge abutment is designed with geogrid reinforcement. Computer program in c is prepared for the reinforced earth bridge abutment.

Cost comparative study of reinforced earth retaining wall with R.C.C retaining wall is carried out to study the economic aspect of reinforced earth construction. Cost comparative study of reinforced earth bridge abutment with R.C.C bridge abutment is also carried out.

8.2 CONCLUSIONS

Following are the major conclusions arrived during this study:

- From the experimental study, it is clear that there is improvement in bearing capacity of soil when it is reinforced with the woven geotextiles. So for the soil with low bearing capacity it is advisable to adopt the reinforced earth technology to increase the bearing capacity of soil.
- The increase in bearing capacity of soil is approximately 10 to 35% when soil is reinforced with the geotextile compared to unreinforced soil.
- Reinforced earth retaining wall is more economical compared to R.C.C retaining wall. Approximately 60 to 75% of the cost can be reduced in reinforced earth construction compared to R.C.C construction.
- Quantity of concrete and formwork is less required in reinforced earth construction compared to R.C.C construction while there is little variation in quantity of the reinforcing steel required for both type of construction.
- Reinforced earth bridge abutment is more economical compared to R.C.C bridge abutment. Approximately 45 to 60% of the cost can be reduced with reinforced earth bridge abutment compared to R.C.C bridge abutment.
- As height of the abutment is increase, reinforced earth bridge abutment is more economical compared to R.C.C bridge abutment. Same as in retaining walls with increasing height of the wall reinforced

earth retaining walls are more economical compared to R.C.C retaining wall.

- Reinforced earth bridge abutment is economical than R.C.C bridge abutment because there is no piles required for reinforced earth bridge abutment and quantity of concrete required is also very less as there is mostly mass of the reinforced earth.

8.3 FUTURE SCOPE OF WORK

It is possible to do the comparison of reinforced earth retaining walls with two types of reinforcements like galvanized strips and geotextiles.

Experimental study can be done for more conditions with varying depth of the geotextiles.

Slope and bridge abutments are designed with another kind of reinforcement i.e. metallic strip or geotextile. Comparative study for slopes can also be done.

The present study does not consider the effect of dynamic loading due to earthquake. One can analyze, design and quantify these different types of reinforced earth structures with earthquake considerations.

REFERENCES

Papers

1. Jenner C.G., "Reinforced soil retaining structures", geosynthetics – new horizons, M/s Asian books pvt. Ltd., 2004, pg. 9-20.

2. Sudhakar M. and Rajesh V., "Reinforced soil wall – a case study", geosynthetics – new horizons, M/s Asian books pvt. Ltd., 2004, pg. 31-37.

3. Kempton G. and Naughton P., "Design and construction of reinforced soil walls to BS8006 and some recent advances", geosynthetics – new horizons, M/s Asian books pvt. Ltd., 2004, pg. 21-30.

4. Dey B., "Analysis of bearing capacity of reinforced soil under foundation", *IGC*, December-1999, pg. 180-182.

5. Loke K.H., "Reinforced soil slopes and landslide mitigation", geosynthetics – new horizons, M/s Asian books pvt. Ltd., 2004, pg.59-71.

6. Purkayastha R.D. et al., "Analysis of reinforced slopes by extending bishop's method", *IGC*, December-2005, pg. 181-184.

7. Bhakat A. and swami saran, "Analysis and design of reinforced earth abutments", *Advances in bridge engineering*, March-2006, pg. 75-87.

8. Gandhi G.N. et al., "Bearing capacity of soil reinforced with geotextile", *IGC*, December-2005, pg. 235-238.

9. Murthy V.S. et al., "Effect of reinforced parameters on strength improvement of reinforced sands", *IGC*, December-2005, pg. 245-248.

Books

1. Saxena K.R., Geotechnical engineering, oxford and IBH publishing co. pvt. Ltd, 1994.

2. Gulhati S.K. and Datta M., Geotechnical engineering, Tata McGraw hill co. ltd, 2006.

3. Das B.M., Principles of foundation engineering, PWS publishing co. ltd, 2003.

4. Swami Saran, Reinforced soil and its engineering applications, I. K. international pvt. Ltd, 2005.

5. Murthy V.N.S, Advanced Foundation Engineering, UBS publisher's distributors' ltd, 2007.

6. Venkatappa Rao and Shahu J., Geosynthetics-New Horizons.

Codes and Standards

1. BS 8006 (1995) - code of practice for strengthened/reinforced soil and other fills, BSI London, UK.

2. FHWA (2001) – Mechanically stabilized earth walls and reinforced soil slopes design and construction guidelines, FHWA-NHI-00-043, United States federal highways administration.

3. IS: 1904-1978 – code of practice for design and construction of foundations in soils – general requirements.

4. IS: 6403-1981 – code of practice for determination of bearing capacity of shallow foundations.

APPENDIX – A

Programming for Reinforced Earth Structures:

I) Reinforced Earth Retaining Wall:

INPUT DATA FOR PROGRAM:

Height of the Wall (m)	= 9.15
Properties of the Material:	
Granular Backfill:	
Angle of Repose (deg.)	= 36
Density of the Soil (kN/m^3)	= 17
Foundation Soil:	
Angle of Friction (deg.)	= 28
Density of the Soil (kN/m^3)	= 18
Cohesion of the Soil (kN/m^3)	= 50
Galvanized Steel Strip Reinforcement:	
Width of the Strip (m)	= 0.0762
Vertical Spacing of the Strip (m)	= 0.6
Horizontal Spacing of the Strip (m)	= 0.9
Grade of the Steel (kN/m^2)	= 25
Angle of soil-tie Friction (deg.)	= 20
Factor of Safety for Tie Breaking	= 3
Factor of Safety for Tie Pull-out	= 3
Corrosion rate of the Steel (cm/Yr.)	= 0.0025
Life of the Structure (Years)	= 50

OUTPUT OF THE PROGRAM:

Internal Stability Check:	
The Value of the ka	= 0.261
The value of the sigmaa (kN/m^2)	= 40.38
Thickness of the tie (cm)	= 0.343
Considering rate of corrosion	

Actual thickness of the tie (cm) = 0.468

Length of the tie (m) = 11.480083 when z = 1.50

Length of the tie (m) = 10.715795 when z = 3.00

Length of the tie (m) = 9.951507 when z = 4.50

Length of the tie (m) = 9.187218 when z = 6.00

Length of the tie (m) = 8.422930 when z = 7.50

Length of the tie (m) = 7.658642 when z = 9.00

External Stability Check:

Check for Overturning

F.O.S against overturning = 7.86

Check for Sliding

F.O.S against Sliding = 3.58

Check for Bearing Capacity

Bearing capacity factor N_c = 25.8

Bearing capacity factor N_γ = 16.78

F.O.S against Bearing Capacity = 12.62

II) Reinforced Earth Slope:

INPUT DATA FOR PROGRAM:

Height of the slope (m) = 15.25

Surcharge on slope (kN/m^2) = 12

Density of the backfill (kN/m^3) = 19.25

Angle of internal friction (deg.) = 36

Angle of the slope (deg.) = 45

Overall factor of safety = 1.5

OUTPUT OF THE PROGRAM:

The equivalent height of the slope = 15.87 m

The value of reinforcement coefficient k = 0.15

The total force in the reinforcement = 363.77 kN/m

Provide the reinforcement in to 3 different zones

So total force distribution is

T_{bot} (kN/m) = 181.88

T_{mdl} (kN/m) = 120.04

T_{top} (kN/m) = 61.84

For zone 1,

H_1 (m) = 4.575

Ultimate tensile strength of reinforcement (kN/m) = 84

Reduction factor due to creep = 1.61

Reduction factor due installation damage = 1.10

Reduction factor due to durability = 1.10

Long Term Design Strength of reinforcement (kN/m) = 43.11

Required no. of layers of reinforcement (N) = 4.21

Vertical spacing of reinforcement (S_v in m) = 1.084

For zone 2,

H_2 (m) = 5.49

Ultimate tensile strength of reinforcement (kN/m) = 63.5

Reduction factor due to creep = 1.61

Reduction factor due to installation damage = 1.10

Reduction factor due to durability = 1.10

Long Term Design Strength of reinforcement (kN/m) = 32.59

Required no. of layers of reinforcement (N) = 3.68

Vertical spacing of reinforcement (S_v in m) = 1.49

For zone 3,

H_3 (m) = 5.185

Ultimate tensile strength of reinforcement (kN/m) = 47

Reduction factor due to creep = 1.61

Reduction factor due to installation damage = 1.10

Reduction factor due to durability = 1.10

Long Term Design Strength of reinforcement (kN/m) = 24.12

Required no. of layers of reinforcement (N) = 2.56

Vertical Spacing of reinforcement (S_v in m) = 2.02

Length of reinforcement at top (Lt in m) = 8.73

Length of reinforcement at bottom (Lb in m) = 12.06

III) Reinforced Earth Bridge Abutment:

INPUT DATA FOR PROGRAM:

Height of the backfill (m) = 6

Length of the abutment (m) = 6

Vertical bridge seat load (kN/m) = 150

Horizontal bridge seat load (kN/m) = 25

Allowable soil pressure (kN/m^2) = 250

Safe design strength of reinforcement (kN/m) = 17.5

Uniform surcharge on abutment (kN/m^2) = 10

Factor of safety = 2

Properties of the material:

Backfill:

Density of the backfill (kN/m^3) = 18

Angle of friction (deg.) = 35

Wallfill:

Density of the wallfill (kN/m^3) = 20

Angle of internal friction (deg.) = 35

Value of the a (m) = 1.8

Value of the b (m) = 2

Value of the c (m) = 0.8

Value of m_u = 0.55

Value of alpha = 0.95

OUTPUT OF THE PROGRAM:

External Stability:

Assume Self Weight of the bridge seat = 25kN/m

The value of the w2 (kN/m) = 504

The value of the w3 (kN/m)	= 144
The value of the k_{Ab}	= 0.271
The value of the P1 (kN/m)	= 87.80
The value of the P2 (kN/m)	= 16.259
Factor of Safety against Sliding	= 3.507
Factor of Safety against Overturning	= 6.477
Total Vertical Load (kN/m)	= 863
The value of the eccentricity (m)	= 0.597
Earth Pressure Calculation:	
Maximum Earth Pressure (kN/m^2)	= 229.72
Minimum Earth Pressure (kN/m^2)	= 57.93

Internal Stability:

Vertical Spacing of reinforcement = 0.918171m when hi = 1.0m

Vertical Spacing of reinforcement = 0.613082m when hi = 2.0m

Vertical Spacing of reinforcement = 0.419338m when hi = 3.0m

Vertical Spacing of reinforcement = 0.294429m when hi = 4.0m

Provide vertical spacing of reinforcement (m) = 0.25

No. of layers of reinforcement = 16.80

Value of T= 336.377716 for beta= 5.00

Value of T= 328.308899 for beta= 10.0

Value of T= 318.108215 for beta= 15.0

Value of T= 306.045959 for beta= 20.0

Value of T= 292.121399 for beta= 25.0

The Anchorage Length of the reinforcement	= 0.23 m
Available Embedment Length	= 2.37 m

APPENDIX – B

List of Useful Websites:

www.ascelibrary.org
www.google.com
www.sciencedirect.com
www.igcindia.org
www.reinforcedearthcompany.com
www.reinforcedearth.org
www.earthcon-systems.com
www.anchor.com
www.reinforcedsoil.com
www.stratagrid.org
www.delnet.org